Elite Fire Tube Combi

Wall Mount

INSTALLATION / START-UP

MAINTENANCE / PARTS

WARRANTY

Models
EFTC-140W / 199W

Heat Exchanger Bears the ASME "H" Stamp

NOTICE: *HTP reserves the right to make product changes or updates without notice and will not be held liable for typographical errors in literature.*

NOTE TO CONSUMER: PLEASE KEEP ALL INSTRUCTIONS FOR FUTURE REFERENCE.

The surfaces of these products contacted by consumable water contain less than 0.25% lead by weight, as required by the Safe Drinking Water Act, Section 1417.

⚠ WARNING

WARNING: If the information in these instructions is not followed exactly, a fire or explosion may result causing property damage, personal injury or death.

- Do not store or use gasoline or other flammable vapors and liquids in the vicinity of this or any other appliance.

WHAT TO DO IF YOU SMELL GAS

- Do not try to light any appliance.
- Do not touch any electrical switch; do not use any phone in your building.
- Immediately call your gas supplier from a neighbor's phone. Follow the gas supplier's instructions.
- If you cannot reach your gas supplier, call the fire department.
- Installation and service must be provided by a qualified installer, service agency or the gas supplier.

Improper installation, adjustment, alteration, service, or maintenance can cause injury, property damage, or death. Refer to this manual. Installation and service must be performed by a qualified installer, service agency, or gas supplier.

California Proposition 65 Warning: This product contains chemicals known to the State of California to cause cancer, birth defects, or other reproductive harm.

FOR YOUR SAFETY READ BEFORE OPERATING

WARNING: If you do not follow these instructions exactly, a fire or explosion may result, causing property damage, personal injury or loss of life.

A. This appliance does not have a pilot. It is equipped with an ignition device which automatically lights the burner. Do not try to light the burner by hand.

B. BEFORE OPERATING smell all around the appliance area for gas. Be sure to smell next to the floor because some gas is heavier than air and will settle on the floor.

WHAT TO DO IF YOU SMELL GAS

- Do not try to light any appliance
- Do not touch any electric switch; do not use any phone in your building
- Immediately call your gas supplier from a neighbor's phone. Follow the gas suppliers' instructions.
- If you cannot reach your gas supplier, call the fire department.

C. Use only your hand to turn the gas control knob. Never use tools. If the handle will not turn by hand, don't try to repair it, call a qualified service technician. Force or attempted repair may result in a fire or explosion.

D. Do not use this appliance if any part has been under water. Immediately call a qualified service technician to inspect the appliance and to replace any part of the control system and any gas control which has been under water.

OPERATING INSTRUCTIONS

1. STOP! Read the safety information above.
2. Set the thermostat to lowest setting.
3. Turn off all electric power to the appliance.
4. This appliance is equipped with an ignition device which automatically lights the burner. Do not try to light the burner by hand.

GAS VALVE ON

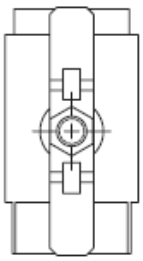

GAS VALVE OFF

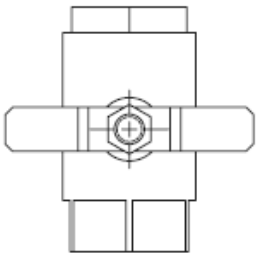

5. Remove front cover.
6. Turn gas shutoff valve to "off". Handle will be across the piping, do not force.
7. Wait five (5) minutes to clear out any gas. If you then smell gas, STOP! Follow "B" in the safety information above on this label. If you don't smell gas, go to next step.
8. Turn gas shutoff valve to "on". Handle will be in line with piping.
9. Install Front Cover.
10. Turn on all electric power to appliance.
11. Set thermostat to desired setting.
12. If the appliance will not operate, follow the instructions "To Turn Off Gas To Appliance" and call your service technician or gas supplier.

TO TURN OFF GAS TO APPLIANCE

1. Set the thermostat to lowest setting.
2. Turn off all electric power to the appliance if service is to be performed.
3. Remove Front Cover.
4. Turn gas shutoff valve to "off". Handle will be across the piping. Do not force.
5. Install Front Cover.

LP-175 Rev. 4 3-11-08

SPECIAL ATTENTION BOXES
The following defined terms are used throughout this manual to bring attention to the presence of hazards of various risk levels, or to important product information.
⚠ DANGER
DANGER indicates an imminently hazardous situation which, if not avoided, will result in death or serious injury.
⚠ WARNING
WARNING indicates a potentially hazardous situation which, if not avoided, could result in death or serious injury.
⚠ CAUTION
CAUTION indicates a potentially hazardous situation which, if not avoided, may result in minor or moderate injury.
CAUTION
CAUTION used without the safety alert symbol indicates a potentially hazardous situation which, if not avoided, may result in property damage.
NOTICE
NOTICE is used to address practices not related to personal injury.
SAFETY INSTRUCTIONS
SAFETY INSTRUCTIONS (or equivalent) signs indicate specific safety related instructions or procedures.

NOTE: Contains additional information important to a procedure.

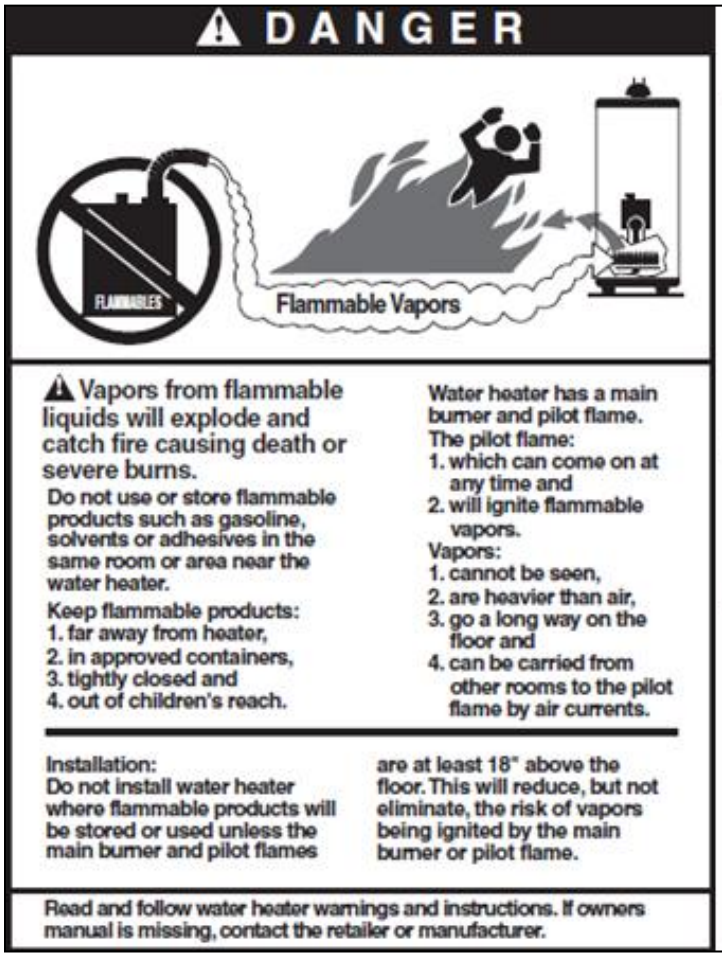

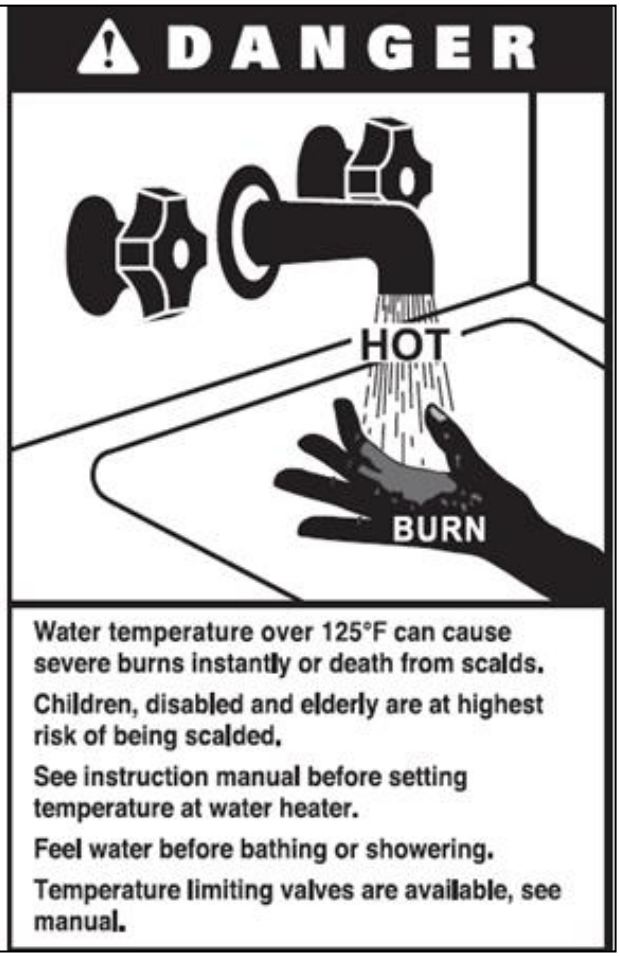

FOREWORD

This manual is intended to be used in conjunction with other literature provided with the appliance. This includes all related control information. It is important that this manual, all other documents included with this system, and additional publications including the National Fuel Gas Code, ANSI Z223.1-2002, be reviewed in their entirety before beginning any work.

Installation should be made in accordance with the regulations of the Authority Having Jurisdiction, local code authorities, and utility companies which pertain to this type of water heating equipment.

Authority Having Jurisdiction (AHJ) – The Authority Having Jurisdiction may be a federal, state, local government, or individual such as a fire chief, fire marshal, chief of a fire prevention bureau, labor department or health department, building official or electrical inspector, or *others having statutory authority*. In some circumstances, the property owner or his/her agent assumes the role, and at government installations, the commanding officer or departmental official may be the AHJ.

NOTE: HTP, Inc. reserves the right to modify product technical specifications and components without prior notice.

FOR THE INSTALLER

⚠ DANGER

This manual must only be used by a qualified heating installer/service technician. Read all instructions in this manual before installing. Perform steps in the order given. Failure to comply could result in substantial property damage, severe personal injury, or death.

This appliance must be installed by qualified and licensed personnel. The installer should be guided by the instructions furnished with the appliance, and with local codes and utility company requirements. In the absence of local codes, preference should be given to the National Fuel Gas Code, ANSI Z223.1-2002.

INSTALLATIONS MUST COMPLY WITH:
Local, state, provincial, and national codes, laws, regulations and ordinances.

The latest version of the National Fuel Gas Code, ANSI Z223.1, from American Gas Association Laboratories, 8501 East Pleasant Valley Road, Cleveland, OH 44131.

In Canada – CGA No. B149 (latest version), from Canadian Gas Association Laboratories, 55 Scarsdale Road, Don Mills, Ontario, Canada M3B 2R3. Also, Canadian Electrical Code C 22.1, from Canadian Standards Association, 5060 Spectrum Way, Suite 100, Mississauga, Ontario, Canada L4W 5N6.

Code for the installation of Heat Producing Appliances (latest version), from American Insurance Association, 85 John Street, New York, NY 11038.

The latest version of the National Electrical Code, NFPA No. 70.

NOTE: The gas manifold and controls met safe lighting and other performance criteria when the appliance underwent tests specified in ANSI Z21.13 – latest edition.

⚠ WARNING

The hydronic supply and return connections of these products are for installation in closed loop systems ONLY! Use of this product in any manner other than described in this manual may result in premature product failure, substantial property damage, severe personal injury, or death. Damage or failure of this product (or the system in which it is installed) due to unauthorized use **IS NOT COVERED BY WARRANTY**.

TABLE OF CONTENTS

PART 1 – ITEMS SHIPPED WITH THE APPLIANCE 7

PART 2 – SAFETY REGULATIONS 8

A. OPERATION AND INSTALLATION WARNINGS 8

B. IMPROPER COMBUSTION 9

C. GAS 9

D. WHEN SERVICING THE APPLIANCE 9

E. WATER CHEMISTRY 10
F. FREEZE PROTECTION 10
G. SCALDING 10
H. HIGH ELEVATION INSTALLATIONS 11
PART 3 – TECHNICAL SPECIFICATIONS 11
PART 4 – PREPARE APPLIANCE LOCATION 14
A. UNCRATING THE APPLIANCE 14
B. BEFORE LOCATING THE APPLIANCE 15
C. LEVELING 16
D. CLEARANCES FOR SERVICE ACCESS 16
E. RESIDENTIAL GARAGE AND CLOSET INSTALLATIONS 17
F. EXHAUST VENT AND INTAKE PIPE 17
G. CARBON MONOXIDE DETECTORS 17
H. PREVENT COMBUSTION AIR CONTAMINATION 18
I. REMOVING AN APPLIANCE FROM A COMMON VENT SYSTEM 18
J. WALL-MOUNTING THE APPLIANCE 19
K. FLOW RESTRICTOR 19
PART 5 – VENTING 21
A. INTAKE PIPE AND EXHAUST VENT GUIDELINES 21
B. APPROVED VENT MATERIALS 25
C. ALLOWED COMBINED VENT LENGTHS 25
D. TIGHTENING APPLIANCE COLLAR TO EXHAUST VENT AND INTAKE PIPE 26
E. VENT TERMINATION 27
1. Direct Vent, Two Pipe Roof and Sidewall Vent Terminations 27
2. Direct Vent, Optional Horizontal and Vertical Vent Kits 28
3. Screen Installation 28
4. Power Venting, Indoor Combustion Air Installation in Confined or Unconfined Space 29
PART 6 – INSTALL THE CONDENSATE DRAIN 31
PART 7 – GAS PIPING 32
A. GAS PIPE SIZING TABLES 32
1. Gas Pipe Sizing 32
2. Natural Gas Pipe Sizing 32
3. LP (Liquid Propane) Gas Pipe Sizing 33
B. GAS CONNECTION REQUIREMENTS 33
PART 8 – WATER PIPING 35
A. GENERAL PLUMBING CONNECTION GUIDELINES 35
B. DHW PIPING 37
C. CENTRAL HEATING PIPING SYSTEM WATER PIPING METHODS 37
D. CH AND DHW PRESSURE RELIEF VALVES 42
PART 9 – CONNECT ELECTRICAL POWER / INITIAL STARTUP 43
A. GENERAL OPERATING CONDITIONS 43

B. WIRING INFORMATION 43
C. DIP SWITCHES 44
PART 10 – OPERATING SYSTEM INSTRUCTIONS 49
A. CONTROL PANEL 49
B. LCD DISPLAY DESCRIPTIONS 50
C. START-UP SEQUENCE 50
D. CHANGING THE DHW SET-POINT 51
E. CHANGING THE TEMPERATURE INDICATOR 51
F. CHANGING THE CH SET-POINT 51
G. STORAGE MODE 52
H. STATUS DISPLAY MODE 52
I. INSTALLER MODE 53
J. ERROR MODE 55
K. ERROR TREE ANALYSIS 58
1. FLAME DETECTION 58
2. GAS DETECTION 58
3. APS / BURNER OVERHEAT LIMIT / CONDENSATE BLOCK SWITCH 59
4. DHW / OP / CH OVERHEAT / EXHAUST OVERHEAT SENSORS 59
L. OUTDOOR TEMPERATURE MODE (OPTIONAL) 59
M. 0-10 VOLT INPUT 60
PART 11 – START-UP PREPARATION 61
A. CHECK / CONTROL WATER CHEMISTRY 61
B. GLYCOL ANTIFREEZE SOLUTIONS 61
C. CHECK FOR GAS LEAKS 62
D. FILL AND TEST WATER SYSTEM 62
E. PURGE AIR FROM CH AND INTERNAL STORAGE TANK 63
F. PURGE AIR FROM DHW SYSTEM 63
G. CHECK THERMOSTAT CIRCUIT(S) 64
H. CONDENSATE REMOVAL 64
I. FINAL CHECKS BEFORE STARTING APPLIANCE 64
J. ADJUSTING GAS PRESSURE AT THE APPLIANCE 64
K. SETTING AND VERIFYING THE COMBUSTION SETTING 65
PART 12 –INSTALLATION AND START-UP CHECKLIST 67
PART 13 – TROUBLESHOOTING 69
PART 14 – ANNUAL MAINTENANCE PROCEDURES 70
REPLACEMENT PARTS 75
Limited Warranty for EFTC Appliances 84
START-UP REPORT 86
MAINTENANCE REPORT 87
MAINTENANCE NOTES 88
CUSTOMER INSTALLATION RECORD FORM 89

PART 1 – ITEMS SHIPPED WITH THE APPLIANCE

ITEM	DESCRIPTION	QUANTITY
Elite Fire Tube Combi Appliance 140W / 199W		1
Installation and User's Information Manuals, H2 Document	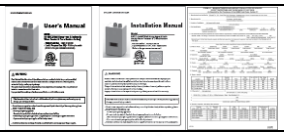	1 Each
Condensate Hose (7855P-089)	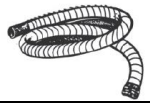	1
CH Pressure Relief Valve With ¾" X 1" Bushing (CH Line ¾" 30 psi) (7855P-077)		1 Each.
Vent Screens (3") (7855P-085)	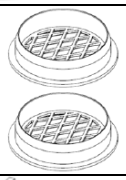	2 Screens
Outdoor Sensor with Screws and Anchors (7855P-084)	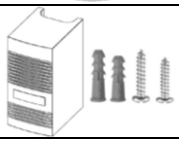	1
Combi Venting Kit 3" CPVC (S7855-002)		6" Length
½" X ¾" Bell Coupling for Gas Line 140W Model Only (7855P-086)		1
Spare Parts Kit (Gaskets and O-Rings) (7855P-258)		1
Propane (LP) Conversion Kit (140W Model - 7855P-099) (199W Model – 7855P-452)	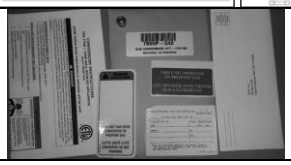	1
Anchors and Wall Mounting Bracket (7850P-084)	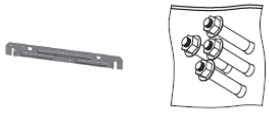	1
Blue Flow Restrictor (Limits Flow to 4.5 GPM) 140W Model Only (7855P-260)		1

OPTIONAL PARTS (Not Included)		
ITEM	**DESCRIPTION**	**PART NUMBER**
Threaded ¾" DHW Tankless Isolation Valves (With Pressure Relief Valve) (7850P-090)		2
Vent Screens (2" Mesh) (7850P-088)	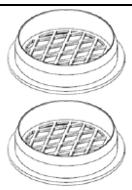	2 Screens

Table 1 – Items Included with the Appliance

PART 2 – SAFETY REGULATIONS

A. OPERATION AND INSTALLATION WARNINGS

To avoid serious injury or death, read, understand, and follow all the precautions listed here.

⚠ DANGER
Vapors from flammable liquids will explode and can cause a fire, resulting in personal injury or death. The appliance has a burner that can come on at any time and ignite vapors. DO NOT use or store flammable liquids around the appliance.
Improper venting can cause a build-up of carbon monoxide. Breathing carbon monoxide can result in brain damage or death. DO NOT operate the appliance unless it is properly vented to the outside and has an adequate fresh air supply for safe operation. Inspect the exterior exhaust gas outlet port and fresh air inlet port on a regular basis to ensure they are functioning properly.
A concentration of carbon monoxide as small as .04% (400 parts per million) in the air can be fatal. When making high fire or low fire adjustments, CO levels must be monitored using a flue gas analyzer such that a CO level of no more than 400 ppm is exceeded at any time during operation.
Adjusting the "low fire offset" on the gas valve in even small increments can result in a significant increase in CO concentration. To avoid serious injury or death, DO NOT make any adjustments to the gas valve without monitoring the exhaust gases with a fully functional and calibrated flue gas analyzer.
Failure to follow these statements will result in property damage, severe personal injury, or death.
⚠ WARNING
This appliance must be installed by a licensed plumber, licensed gas fitter, and/or professional service technician. Improper installation and/or operation can cause a potentially hazardous situation, which, if not avoided, could result in serious injury or death, and will void the warranty.
HTP, Inc. cannot anticipate every circumstance that might involve a potential hazard. Each installation has its own specialized characteristics, requirements, and possible hazards. Therefore, all possible incidents are not included in these warnings. Proper and safe installation, operation, and service are the responsibility of the professional service technician.
Proper care of the appliance is the user's responsibility. Ensure the user carefully reads and understands the User's Information Manual before operating and maintaining the appliance.
Make sure the user knows the location of the gas shut-off valve and how to operate it. Immediately close the gas shut-off valve if the appliance is subjected to fire, overheating, flood, physical damage, or any other damaging condition that might affect the operation of the unit. Have the appliance checked by a qualified technician before resuming operation.
Do not power up the unit unless the gas and water supply valves are fully opened. Make sure the fresh air intake port and exhaust gas port are open and functional.
No one but a professional service technician should attempt to install, service, or repair this appliance. There are no serviceable parts which can be changed by the user / owner. User / Owner: Contact the original professional service technician if the appliance needs repair or maintenance. If the original technician is unavailable, ask your gas supplier for a list of qualified service providers.
Keep the area around the appliance clean and free of all materials that can burn. DO NOT store or place gasoline, oils, spray paint, or other flammable products near the appliance.
DO NOT use spray paint, hair spray, or any other flammable spray near the appliance or near the exterior fresh air intake port. DO NOT place any items in or around the exterior exhaust gas outlet port and/or fresh air inlet port that could restrict or block the flow in or out of the vent system.
DO NOT store or place newspapers, laundry, or other combustible items near the appliance or the exterior exhaust gas outlet and/or fresh air inlet port.
The owner should inspect the system monthly for damage, water stains, signs of rust, corrosion, and exhaust vent and air intake blockage. If inspection of the unit shows signs of damage, the appliance should be shut off until the problem is repaired by a qualified technician.

⚠ WARNING

After installation, all appliance safety devices should be tested.

This appliance is certified for indoor installations only. The appliance consists of gas ignition system components which must be protected from water (dripping, spraying, etc.) during operation and service. Carefully consider installation location and the placement of critical components (circulators, condensate neutralizers, etc.) before installing the appliance.

DO NOT allow children to operate this unit. DO NOT use this unit if it does not appear to be operating correctly. A qualified technician should service and inspect the appliance annually.

The appliance DHW temperature is factory set to 125ºF (51ºC). To avoid scalding, always check the temperature of the hot water before bathing, showering, washing, etc. DO NOT adjust the water temperature while the appliance is being used by other persons.

If the appliance is exposed to the following, do not operate until all corrective steps have been made by a qualified service technician:

1. FIRE
2. DAMAGE
3. WATER

This appliance is equipped with a three prong plug. It should only be plugged directly into a properly grounded three prong receptacle. DO NOT remove the ground plug from the plug.

DO NOT alter or modify the appliance or appliance controls. This can be dangerous and WILL VOID the warranty.

Failure to follow these statements could result in property damage, severe personal injury, or death.

NOTICE

Any claims for damage or shortage in shipment must be filed immediately against the transportation company by the consignee.

This appliance provides a overheat shutdown limit. In the event the appliance water exceeds the set point of the control limit, the cutoff will trip and the appliance will shut down. Certain local codes require additional temperature limits. In addition, certain types of systems may operate at temperatures below the minimum set point of the limit provided with the appliance. Contact a qualified service technician for additional overheat controls.

NOTE: When inquiring about service or troubleshooting, reference the model and serial numbers from the appliance rating label.

⚠ WARNING

DO NOT USE THIS APPLIANCE IF ANY PART HAS BEEN SUBMERGED IN WATER. Immediately call a qualified service technician. The appliance MUST BE replaced if it has been submerged. Attempting to operate an appliance that has been submerged could create numerous harmful conditions, such as a potential gas leakage causing a fire and/or explosion, or the release of mold, bacteria, or other harmful particulates into the air. Operating a previously submerged appliance could result in property damage, severe personal injury, or death.

NOTE: Appliance damage due to flood or submersion is considered an Act of God, and IS NOT covered under product warranty.

Be sure to disconnect electrical power before opening appliance cabinet or performing service. Label all wires while performing service to ensure proper re-wiring of the appliance. Wiring errors can cause improper or dangerous operation. Failure to do so could result in an electrical shock, improper appliance operation, property damage, serious personal injury, or death.

CAUTION

Due to the low water content of the appliance, improper sizing of the appliance with regard to heating system load will result in excessive cycling and accelerated component failure. HTP **DOES NOT** warrant failures caused by improperly sized appliance applications. **DO NOT** oversize the appliance to the system. Modular appliance installations greatly reduce the likelihood of appliance oversizing.

B. IMPROPER COMBUSTION

⚠ WARNING

Do not obstruct the flow of combustion and ventilating air. Adequate air must be provided for safe operation. Failure to keep the exhaust vent and intake pipe clear of ice, snow, or other debris could result in property damage, serious personal injury, or death.

C. GAS

Should overheating or gas supply fail to shut off, do not turn off or disconnect electrical supply to the circulator. Instead, shut off the gas supply at a location external to the appliance.

D. WHEN SERVICING THE APPLIANCE

- To avoid electric shock, disconnect electrical supply before performing maintenance.
- To avoid severe burns, allow appliance to cool.
- Do not use petroleum-based cleaning or sealing compounds in an appliance system. Gaskets and seals in the system may be damaged, possibly resulting in substantial property damage.

- Do not use “homemade cures” or “patent medicines”. Substantial property damage, damage to appliance, and/or serious personal injury may result.
- Always verify proper operation after servicing the appliance.

E. WATER CHEMISTRY

CAUTION

Chemical imbalance of the water supply may affect efficiency and cause severe damage to the appliance and associated equipment. Water quality must be professionally analyzed to determine whether it is necessary to treat the water. Various solutions are available to adjust water quality. Adverse water quality will affect the reliability of the system. In addition, operating temperatures above 135ºF will accelerate the build-up of lime scale and possibly shorten appliance service life. Failure of an appliance due to lime scale build-up, low pH, or other chemical imbalance IS NOT covered by the warranty.

The water must be potable, free of corrosive chemicals, sand, dirt, and other contaminates. It is up to the installer to ensure the water does not contain corrosive chemicals or elements that can damage the heat exchanger. Potable water is defined as drinkable water supplied from utility or well water in compliance with EPA secondary maximum contaminant levels (40 CFR Part 143.3) as shown in the table below. If the water contains contaminants higher than outlined by the EPA, water treatment is recommended and additional, more frequent maintenance may be required.

If you suspect that your water is contaminated in any way, discontinue use of the appliance and contact an authorized technician or licensed professional.

Contaminant	Maximum Allowable Level	Contaminant	Maximum Allowable Level
Total Hardness (Residential Use - Below 140ºF water temperature)	200 mg/l (12 grains/gallon)	Manganese	0.05 mg/l or PPM
Total Hardness (Commercial Use - 140ºF and above water temperature)	120 mg/l (7 grains/gallon)	pH	6.5-8.5
Aluminum	0.05 to 0.2 mg/l or PPM	Sulfate	205 mg/l or PPM
Chloride	100 mg/l or PPM	Total Dissolved Solids (TDS)	500 mg/l or PPM
Copper	1 mg/l or PPM	Zinc	5 mg/l or PPM
Iron	0.3 mg/l or PPM	Dissolved Carbon Dioxide (CO2)	15 mg/l or PPM

Table 2 – Water Chemistry Specifications

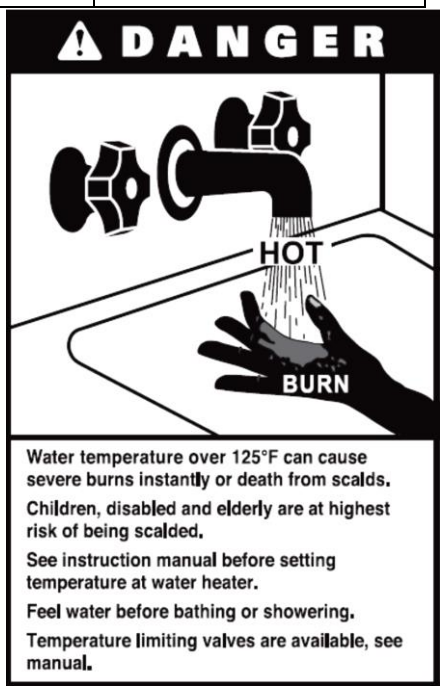

F. FREEZE PROTECTION

CAUTION

Consider appliance piping and installation when determining appliance location.

NOTE: Damages resulting from incorrect installation or from use of products not approved by HTP, Inc. ARE NOT covered by warranty.

G. SCALDING

APPROXIMATE TIME / TEMPERATURE RELATIONSHIPS IN SCALDS	
120ºF	More than 5 minutes
125ºF	1 ½ to 2 minutes
130ºF	About 30 seconds
135ºF	About 10 seconds
140ºF	Less than 5 seconds
145ºF	Less than 3 seconds
150ºF	About 1 ½ seconds
155ºF	About 1 second

Table 3 – Time and Temperature Relationship in Scalds

This heater can deliver scalding water. Be careful whenever using hot water to avoid scalding injury. Certain appliances, such as dishwashers and automatic clothes washers may require increased water temperature. By setting the thermostat on this heater to obtain the increased water temperature required by these appliances, you may create the potential for scald injury.

To protect against injury, you should install a mixing valve in the water system. This valve will reduce point of discharge temperature by mixing cold and hot water in branch supply lines. Such valves are available from your local plumbing supplier.

Table 4 details the relationship of water temperature and time with regard to scald injury and may be used as a guide in determining the safest water temperature for your applications.

H. HIGH ELEVATION INSTALLATIONS

⚠ WARNING
Natural gas at high elevation might contain less heating value than typical 1,000 BTU/cu ft and therefore can cause improper air / gas mix leading to improper combustion. For natural gas installations above 3,000 ft, call your gas provider to determine the heating value of the supplied natural gas.

PART 3 – TECHNICAL SPECIFICATIONS

MODEL		140W	199W
Installation		Indoor, Wall Mount, Fully Condensing	
Minimum / Maximum Input (Btu/Hr)	Central Heating (CH)	28,000 / 140,000	19,900 / 140,000*
	Domestic Hot Water (DHW)		19,900 / 199,000*
AFUE		95%	
Hot Water Capacity	35ºF Rise	7.1 Gal	9.9 GPM
	45ºF Rise	5.5 Gal	7.7 GPM
	77ºF Rise	3.2 Gal	4.8 GPM
Flue System		Sealed Combustion Direct Vent, Power Vent	
Combined Vent Length		2” (50 feet), 3” (100 feet)	
Shipping Weight (lbs est.)		110	120
Orifice Size	NG	0.255” (6.5 mm)	0.327” (8.3mm)
	LP	0.19” (4.85 mm)	0.244” (6.2mm)
Gas Supply Pressure	NG	3.5” to 14” WC	
	LP		
Manifold Pressure	Min (2” / 3” Vent)	NG/LP: 0” WC	NG/LP: -0.015” WC
	Max (2” / 3” Vent)	NG/LP: -0.22” WC	NG/LP: -0.134’WC / -0.173”WC
Power Supply	Main Supply	120V 60 Hz / 6A	
	Maximum Power Consumption	160W	
Ignition System		Direct Electronic Ignition / Automatic Flame Sensing	
Burner System		Single Orifice Premixed Fuel Modulation Ceramic Fiber Infrared	
Gas Valve System		Combination Modulating (Current Proportional)	
Internal Pipe Material		Copper	
Dimensions		W 17.25” – H 34” – D 15.5”	W 19.7” – H 37” – 16.8”
Minimum Flow Rate		0.5 GPM	
Internal Storage Tank Water Capacity (DHW)		1 Gallon	1.5 Gallons
Heat Exchanger Capacity		4 Gallons	3.5 Gallons
Total Water Capacity		5 Gallons	
Main Controller / Control Panel		NGTX-900C / P-920C_CB-HTP	
CH Pressure		Min 12 PSI - Max 30 PSI	
DHW Pressure		Max 150 PSI	
Connection Sizes	DHW Inlet / Hot Water Outlet	¾” NPT	
	CH Supply / Return	1” NPT	
	Gas Inlet	½” NPT (1/2” X ¾” Bell Coupling Provided to Upsize Gas Line)	¾” NPT
Materials	Cabinet	Cold Rolled Carbon Steel	
	Heat Exchanger	Primary Heat Exchanger: Stainless Steel Storage Tank: Stainless Steel	
Safety Devices		Optical Flame Sensor, Burner Plate High Limit (392ºF), Water Temperature High Limit Sensor (200ºF), Freeze Protection (Three Stage Operation - Activates at 46ºF – See Freeze Protection in Installer Menu for Details), Exhaust Temperature High Limit Sensor (190ºF), Blocked Flue Switch, Condensate Switch, Built-In Low Water Cut-Off Probe	

Table 4 – Technical Specifications – NOTE: 199W Models Offer a Maximum BTU/Hr Input of 140,000 as Shipped. Maximum BTU/Hr can be increased up to 199,000 BTU/Hr with a Larger External Pump Installed in the Primary Loop

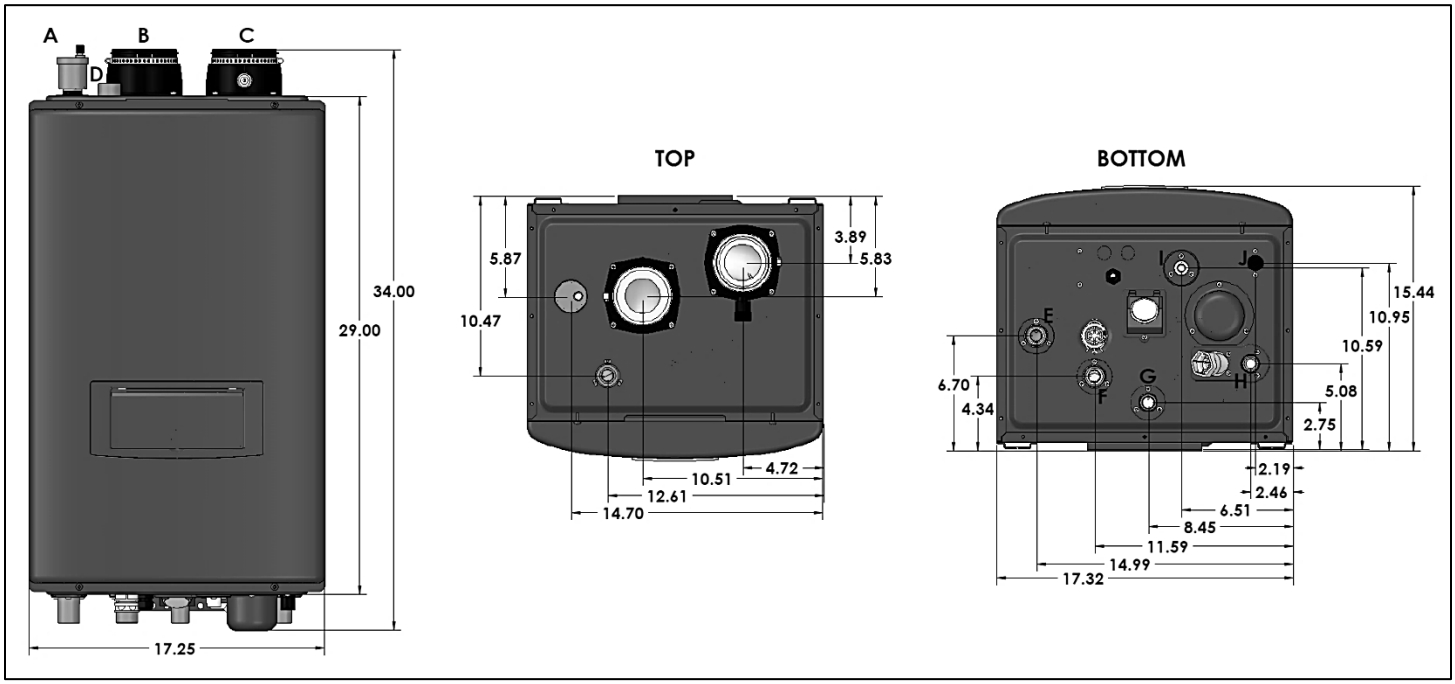

Figure 1 – 140W Specifications and Dimensions

	DESCRIPTION	DIAMETER (ALL NPTM)
A	Automatic Air Vent	-
B	Intake Pipe Connection	3”
C	Exhaust Vent Connection	3”
D	Relief Valve Adapter	¾” NPT
E	CH Supply Adapter	1” NPT
F	CH Return Adapter	1” NPT
G	DHW Outlet Adapter	¾” NPT
H	DHW Inlet Adapter	¾” NPT
I	Gas Connection Adapter	½” NPT (1/2” X ¾” Bell Coupling Provided to Upsize Gas Line)
J	Condensate Adapter	-

Table 5 – 140W Adapter Specifications

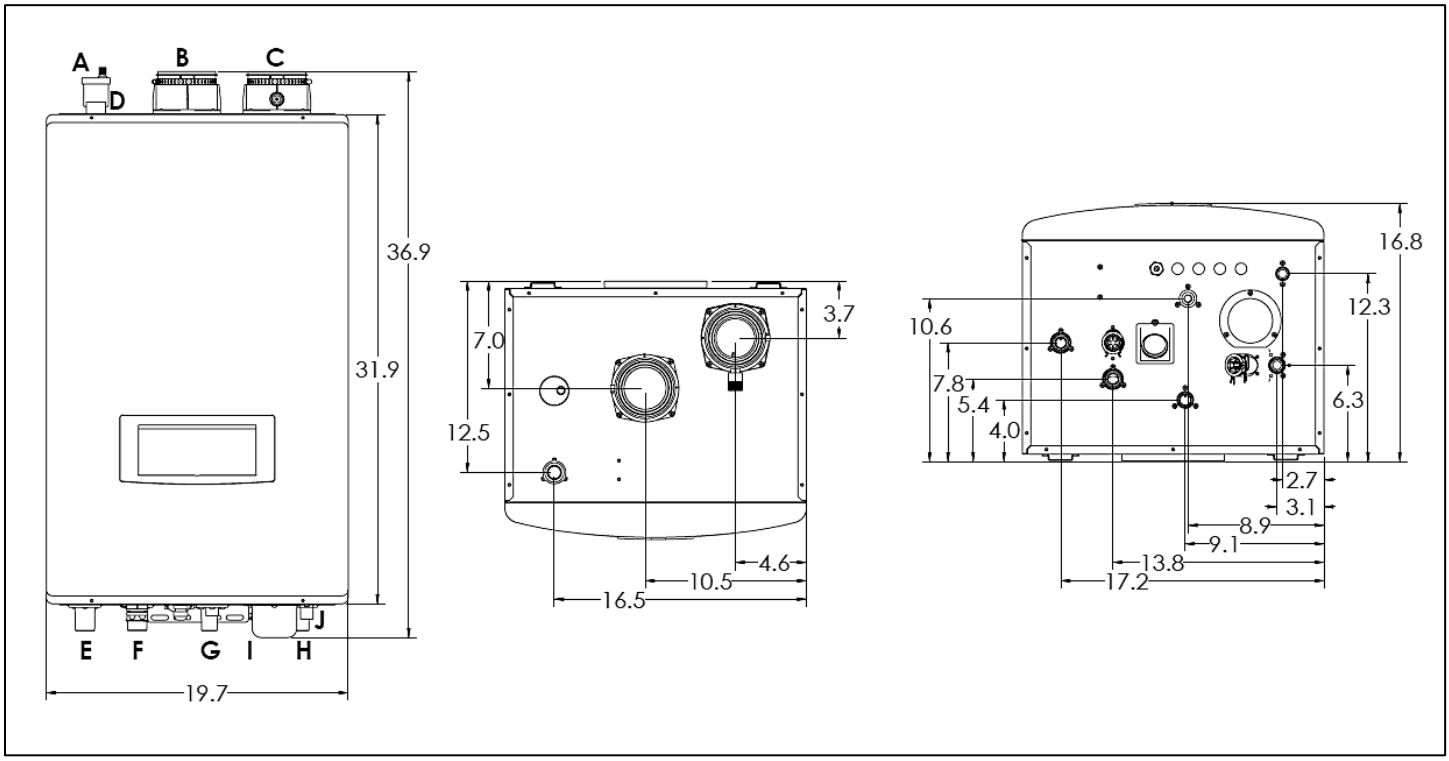

Figure 2 - 199W Specifications and Dimensions

	DESCRIPTION	DIAMETER (ALL NPTM)
A	Automatic Air Vent	-
B	Intake Pipe Connection	3”
C	Exhaust Vent Connection	3”
D	Relief Valve Adapter	¾” NPT
E	CH Supply Adapter	1” NPT
F	CH Return Adapter	1” NPT
G	DHW Outlet Adapter	¾” NPT
H	DHW Inlet Adapter	¾” NPT
I	Gas Connection Adapter	¾” NPT
J	Condensate Adapter	½” NPT

Table 6 - 199W Adapter Specifications

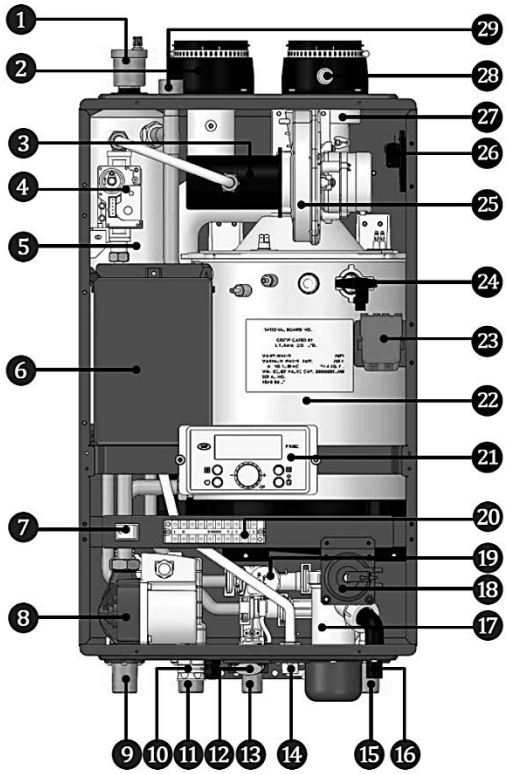

Figure 3 – Model Components

NUMBER	COMPONENT DESCRIPTION	NUMBER	COMPONENT DESCRIPTION
1	Air Vent	**16**	Condensate Adapter
2	Air Intake Adapter	**17**	Condensate Trap
3	Air / Gas Mixing Pipe	**18**	Condensate Air Pressure Switch
4	Gas Valve	**19**	Mixing Valve
5	Internal Storage Tank	**20**	Terminal Block
6	Main PCB	**21**	Control Panel
7	Manual ON/OFF Power Switch	**22**	Heat Exchanger
8	Internal Recirculation Pump (DHW) / CH Internal Primary Pump	**23**	Ignition Transformer
9	CH Supply Adapter	**24**	Flame Detecting Sensor
10	CH Return Adapter	**25**	BLDC Fan
11	CH Return Filter	**26**	Air Pressure Switch
12	CH Pressure Gauge	**27**	Exhaust Vent Pipe
13	DHW Outlet Adapter	**28**	Exhaust Vent Adapter
14	Gas Inlet Adapter	**29**	Relief Valve Adapter
15	DHW Inlet Adapter With Filter and Flow Restrictor		

Table 7 – Component List

PART 4 – PREPARE APPLIANCE LOCATION

A. UNCRATING THE APPLIANCE

⚠ WARNING

UNCRATING APPLIANCE – Any claims for damage or shortage in shipment must be filed immediately against the transportation company by the consignee.

CAUTION

Cold weather handling – If appliance has been stored in a very cold location (below 0ºF) before installation, handle with care until the plastic components come to room temperature.

Remove all sides of the shipping crate to allow the appliance to be lifted into its installation location.

CAUTION
Carefully consider installation when determining appliance location. Please read the entire manual before attempting installation. Failure to properly take factors such as appliance venting, piping, condensate removal, and wiring into account before installation could result in wasted time, money, and possible property damage and personal injury.

B. BEFORE LOCATING THE APPLIANCE

⚠ WARNING
Incorrect ambient conditions can lead to damage to the heating system and put safe operation at risk. Ensure that the appliance installation location adheres to the information included in this manual. Failure to do so could result in property damage, serious personal injury, or death.

CAUTION
Failure of appliance or components due to incorrect operating conditions IS NOT covered by product warranty.

1. Installation Area (Mechanical Room) Operating Conditions
   - Ensure ambient temperatures are higher than 32ºF/0ºC and lower than 104ºF/40ºC.
   - Prevent the air from becoming contaminated by the products, places, and conditions listed in this manual.
   - Avoid continuously high levels of humidity
   - Never close existing ventilation openings

CAUTION
The service life of the appliance's exposed metallic surfaces, such as the casing, as well as internal surfaces, such as the heat exchanger, are directly influenced by proximity to damp and salty marine environments. In such areas, higher concentration levels of chlorides from sea spray coupled with relative humidity can lead to degradation of the heat exchanger and other appliance components. In these environments, appliances must not be installed using direct vent systems which draw outdoor air for combustion. Such appliances must be installed using room air for combustion. Indoor air will have a much lower relative humidity and, hence, potential corrosion will be minimized.

⚠ WARNING
This appliance is certified for indoor installations only. Do not install the appliance outdoors. Failure to install this appliance indoors could result in substantial property damage, severe personal injury, or death.
This appliance must be installed as described in this manual: upright, with the vent adapters in the vertical position. DO NOT attempt to install this appliance in any other orientation. Doing so will result in improper appliance operation and property damage, and could result in serious personal injury or death.

2. Check for nearby connections to:
   - System water piping
   - Venting connections
   - Gas supply piping
   - Electrical power
   - Condensate drain

CAUTION
Locate the appliance where any leakage from the relief valve, related piping, tank, or connections will not result in damage to surrounding areas or lower floors of the building. The appliance should be located near a floor drain, or installed in an adequately drained drain pan. HTP WILL NOT be held liable for leakage damages.
To conserve water and energy, insulate all water piping, especially the hot and recirculation water lines.

3. Check area around appliance. Remove any combustible materials, gasoline, and other flammable liquids.

⚠ WARNING
Failure to keep appliance area clear and free of combustible materials, liquids, and vapors can result in substantial property damage, severe personal injury, or death.

4. Gas control system components must be protected from dripping water during operation and service.

5. If the appliance is to replace an existing appliance, check for and correct any existing system problems, such as:

- System leaks
- Location that could cause the system and appliance to freeze and leak.
- Incorrectly-sized expansion tank

⚠ WARNING
Do not connect the appliance to any heating systems or components that have been previously used for non-potable applications.
Do not introduce toxic chemicals, such as antifreeze or appliance treatments, into the appliance or any piping meant for potable water purposes.
Ensure that all piping and components connected to the appliance are suitable for potable water applications.
Do not use this appliance only for space heating applications.
Circulators suitable for DHW applications must be used.
Failure to follow these instructions could result in property damage, personal injury, or death.

6. Clean and flush system when reinstalling an appliance.

NOTE: When installing in a zero clearance location, it may not be possible to read or view some product labeling. It is recommended to make note of the appliance model and serial number.

C. LEVELING

⚠ CAUTION
In order for the condensate to properly flow out of the collection system, the appliance must be installed level. Failure to ensure the appliance is installed level will result in improper appliance operation.

D. CLEARANCES FOR SERVICE ACCESS

See Figure 4 and Table 7 for recommended service clearances. If these minimum clearances are not provided, it may not be possible to service the appliance without removing it from the space.

⚠ WARNING
Space must be provided with combustion/ventilation air openings correctly sized for all other appliances located in the same space as the appliance. The appliance cover must be securely fastened to prevent it from drawing air from the appliance room. This is particularly important if the appliance is in a room with other appliances. Failure to comply with the above could result in substantial property damage, severe personal injury, or death.

MINIMUM CLEARANCES	
Installation Clearances from Non-Combustibles / Combustibles	Recommended Service and Proper Operation Clearances
Top	18 in. (45.7 cm)
Back	0 in. (0 cm)
Bottom	12 in. (30.45 cm)
Front	24 in. (60.9 cm)
Right Side	3 in. (7.6 cm)
Left Side	

Table 8 – Minimum Installation and Service Clearances

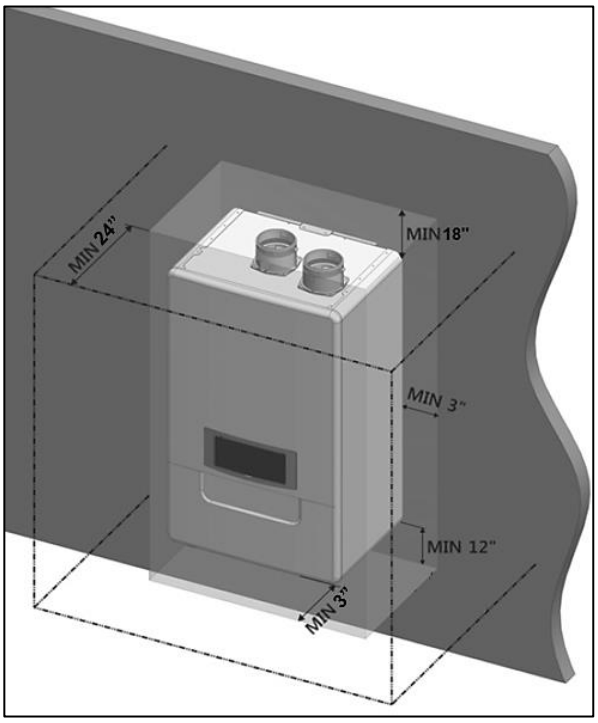

Figure 4 – Minimum Service Clearances

NOTE: A combustible door or removable panel is acceptable front clearance. A 3” minimum clearance must be provided from the appliance front cover to the removable panel or combustible door.

MINIMUM CLEARANCES FROM COMBUSTIBLE MATERIALS

- Hot water pipes – at least 1” from combustible materials.
- Exhaust vent pipe – at least 1” from combustible materials.

CAUTION
Always take future maintenance into consideration when locating the appliance. If the appliance is located in an installation location with limited clearances, it may be necessary to remove the appliance from the space to perform maintenance. Failure to consider maintenance when determining installation location could result in property damage.

E. RESIDENTIAL GARAGE AND CLOSET INSTALLATIONS

CAUTION

Check with your local Authority Having Jurisdiction for requirements when installing appliance in a garage or closet. Please read the entire manual before attempting installation. Failure to properly take factors such as venting, piping, condensate removal, and wiring into account before installation could result in wasted time, money, and possible property damage and personal injury.

PRECAUTIONS

If the appliance is located in a residential garage, it should be installed per the latest edition of the National Fuel Gas Code, ANSI Z223.1, and CGA-B149 Installation Code in Canada.

- Mount the bottom of the appliance a minimum of 18” above the floor of the garage, to ensure the burner and ignition devices are well off the floor.
- Locate or protect the appliance so it cannot be damaged by a moving vehicle.

⚠ WARNING

The space must be provided with correctly sized combustion/ventilation air openings for all other appliances located in the space with the appliance. For power venting installations using room air for combustion, refer to the venting section, this manual, for descriptions of confined and unconfined spaces. Do not install the appliance in an attic. Failure to comply with these warnings could result in substantial property damage, severe personal injury, or death.

F. EXHAUST VENT AND INTAKE PIPE

⚠ WARNING

Vents must be properly supported. The appliance exhaust and intake connections are not designed to carry heavy weight. Vent support brackets must be within 1’ of the appliance and the balance at 4’ intervals. Venting must be readily accessible for visual inspection for the first 3’ from the appliance.

NOTE: To prevent combustion air contamination, see Table 9 in this section when considering exhaust vent and intake pipe termination.

The appliance is rated ANSI Z21.13 Category IV (pressurized vent, likely to form condensate in the vent), and requires a special vent system designed for pressurized venting.

Exhaust vent and intake pipe may be vented vertically through the roof or out a side wall. Venting methods are detailed in the Venting Section. Do not attempt installation using any other means. Be sure to locate the appliance so exhaust vent and intake piping can be routed through the building and properly terminated. Exhaust vent and intake piping lengths, routing, and termination method must comply with methods and limits given in the venting section.

G. CARBON MONOXIDE DETECTORS

In the Commonwealth of Massachusetts and As Required by State and Local Codes

Installation of Carbon Monoxide Detectors: At the time of installation or replacement of the vented gas fueled appliance, the installing plumber or gas fitter shall observe that a hard wired carbon monoxide detector with an alarm and battery back-up is installed on the floor level where the gas appliance is installed, unless the appliance is located in a detached, uninhabitable structure separate from the dwelling, building, or structure used in whole or in part for residential purposes.

In addition, the installing plumber or gas fitter shall observe that a hard wired carbon monoxide detector with an alarm and battery back-up is installed on each additional level of the dwelling, building, or structure served by the vented gas appliance. It shall be the responsibility of the property owner to secure the service of qualified licensed professionals for the installation of hard wired carbon monoxide detectors.

a. In the event that the vented gas fueled appliance is installed in a crawl space or attic, the hard wired carbon monoxide detector with alarm and battery back-up shall be installed on the next adjacent floor level.
b. In the event that these requirements cannot be met at the time of completion of installation, the owner shall have a period of thirty (30) days to comply with the above requirements; provided, however, that during said thirty (30) day period, a battery operated carbon monoxide detector with an alarm shall be installed.

⚠ WARNING

Failure to comply with these requirements could result in product damage, severe personal injury, or death.

Approved Carbon Monoxide Detectors: Each carbon monoxide detector as required in accordance with the above provisions shall comply with NFPA 70 and be ANSI/UL 2034 listed and IAS certified.

H. PREVENT COMBUSTION AIR CONTAMINATION

Install intake piping for the appliance as described in the Venting section. Do not terminate exhaust in locations that can allow contamination of intake air.

⚠ WARNING

Ensure that the intake air will not contain any of the contaminants below. For example, do not pipe intake near a swimming pool. Avoid areas subject to exhaust fumes from laundry facilities. These areas always contain contaminants. Contaminated air will damage the appliance, resulting in possible substantial property damage, severe personal injury, or death.

PRODUCTS TO AVOID	AREAS LIKELY TO HAVE CONTAMINANTS
Spray cans containing fluorocarbons	Dry cleaning/laundry areas and establishments
Permanent wave solutions	Swimming pools
Chlorinated waxes/cleaners	Metal fabrication plants
Chlorine-based swimming pool chemicals	Beauty shops
Calcium chloride used for thawing	Refrigeration repair shops
Sodium chloride used for water softening	Photo processing plants
Refrigerant leaks	Auto body shops
Paint or varnish removers	Plastic manufacturing plants
Hydrochloric or Muriatic acid	Furniture refinishing areas and establishments
Cements and glues	New building construction
Antistatic fabric softeners used in clothes dryers	Remodeling areas
Chlorine-type bleaches, laundry detergents, and cleaning solvents	Garages and workshops
Adhesives used to fasten building products	

Table 9

NOTE: DAMAGE TO THE APPLIANCE CAUSED BY EXPOSURE TO CORROSIVE VAPORS IS NOT COVERED BY WARRANTY. (Refer to the limited warranty for complete terms and conditions).

I. REMOVING AN APPLIANCE FROM A COMMON VENT SYSTEM

⚠ DANGER

Do not install the appliance into a common vent with any other appliance. This will cause flue gas spillage or appliance malfunction, resulting in possible substantial property damage, severe personal injury, or death.

⚠ DANGER

Failure to follow all instructions can result in flue gas spillage and carbon monoxide emissions, causing severe personal injury or death.

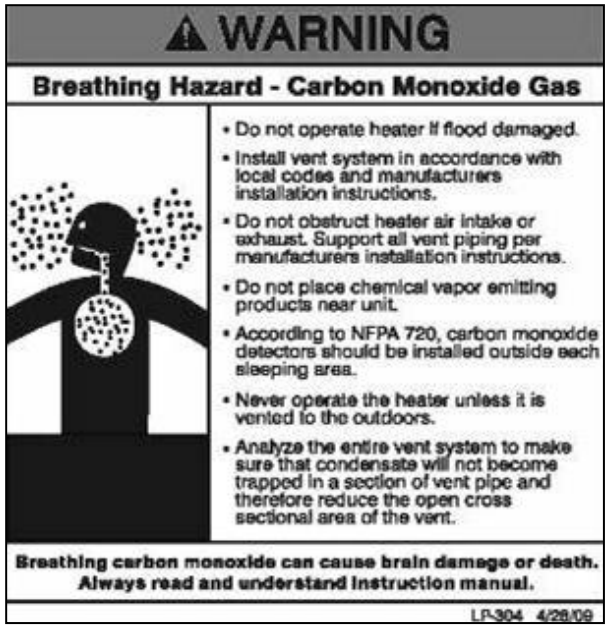

Figure 5 - CO Warning Label

When removing an existing appliance, the following steps must be followed.

1. Seal any unused openings in the common venting system.

2. Visually inspect the venting system for proper size and horizontal pitch to determine if there is blockage, leakage, corrosion or other deficiencies that could cause an unsafe condition.

3. If practical, close all building doors, windows and all doors between the common venting system and other spaces in the building. Turn on clothes dryers and any appliances not connected to the common venting system. Turn on any exhaust fans, such as range hoods and bathroom exhausts, at maximum speed. Do not operate a summer exhaust fan. Close all fireplace dampers.

4. Place in operation the appliance being inspected. Follow the lighting instructions. Adjust the thermostat so the appliance will operate continuously.

5. Test for spillage at the draft hood relief opening after 5 minutes of main burner operation. Use the flame of a match or candle or smoke from a cigarette.

6. After it has been determined that each appliance remaining connected to common venting system properly vents when tested as outlined, return doors, windows, exhaust fans, fireplace dampers and any other gas burning appliance to their previous condition of use.

7. Any improper operation of the common venting system should be corrected so the installation conforms to the National Fuel Gas Code, ANSI Z223.1. When resizing any portion of the common venting system, the common venting system should be resized to approach the minimum size as determined using the appropriate tables in Appendix G in the National Fuel Gas Code, ANSI Z 223.1.

J. WALL-MOUNTING THE APPLIANCE

⚠ WARNING

The appliance must be installed on a wall that can bear its weight (more than 110 lbs. when fully plumbed and full of water). Installing the appliance on a wall which cannot support its weight could result in property damage, personal injury, or death.

The appliance may be installed on any suitable internal wall (suitable sound-proofing may be required when installing onto a stud partition wall).

⚠ WARNING

This appliance is too heavy for one person to lift. It is highly recommended to install the appliance with two people. Use caution as to not drop the appliance, which could damage the appliance and cause property damage and/or severe personal injury. Verify that the appliance is properly and securely mounted before leaving unsupervised. Failure to comply with the above and properly mount the appliance could result in substantial property damage, severe personal injury, or death.

⚠ WARNING

This wall mounting system is not seismic rated and should not be applied as such. Failure to comply with the above and properly mount the appliance could result in substantial property damage, severe personal injury, or death.

POSITIONING THE APPLIANCE ON THE WALL

1. Attach the wall bracket on the location where you want to install the appliance. Ensure it is level and on stud (16” centers) before proceeding.
2. Mark the four drill holes with a pencil or marker. Remove the wall bracket.
3. Drill four (4) holes using a 5/32 drill bit at the marked hole locations.
4. Mount the wall bracket to the wall with the four (4) included anchor bolts. Ensure the mounted bracket is level. See Figure 6A.
5. Align the heater bracket grooves on the back of the appliance with the tongues on the wall bracket and hang the appliance on the bracket. See Figure 6B.

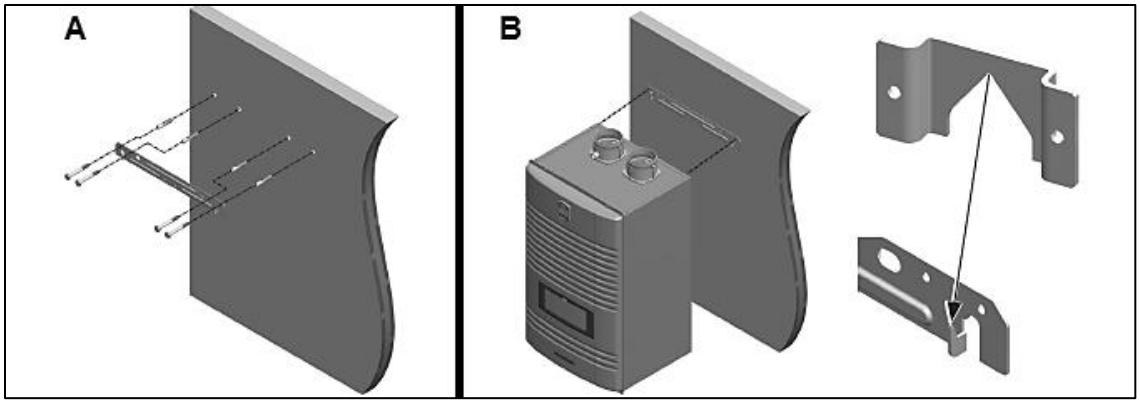

Figure 6 – Wall Mounting the Appliance

K. FLOW RESTRICTOR

A flow restrictor is installed on this appliance at the DHW inlet adapter to avoid excessive flow at the faucets. See Flow Charts, this manual, for more information.

If it is necessary to further increase flow to the system, replace the factory installed white flow restrictor with the blue included with the appliance by following the instructions below.

⚠ WARNING

If the appliance is already fully installed, turn the gas, power, and water off to the appliance and drain all water from the appliance BEFORE proceeding. Failure to comply could result in substantial property damage, severe personal injury, or death.

1. Locate the DHW inlet adapter on the bottom of the appliance.

2. Pull the two pins to release the DHW inlet filter. See Figure 7-A. The flow restrictor is attached to the top of the filter assembly.

3. Remove the installed white flow restrictor and replace it with the blue flow restrictor included with the appliance. See Figure 7-B.

4. Reinstall the DHW inlet filter.

5. Reinstall the two pins.

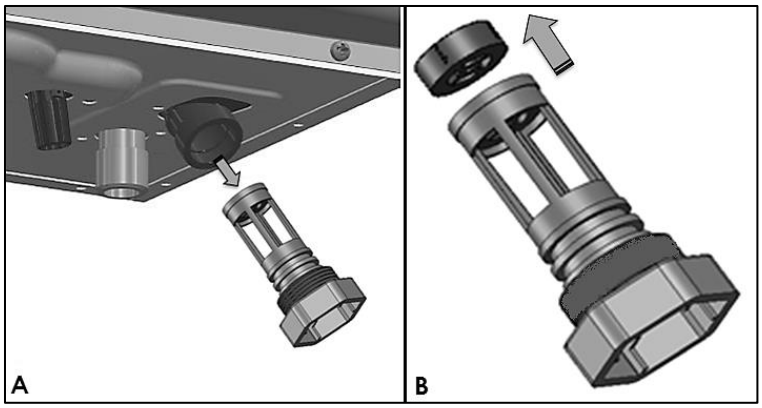

Figure 7 – A – Removing the DHW Inlet Filter, B – Removing the Flow Restrictor

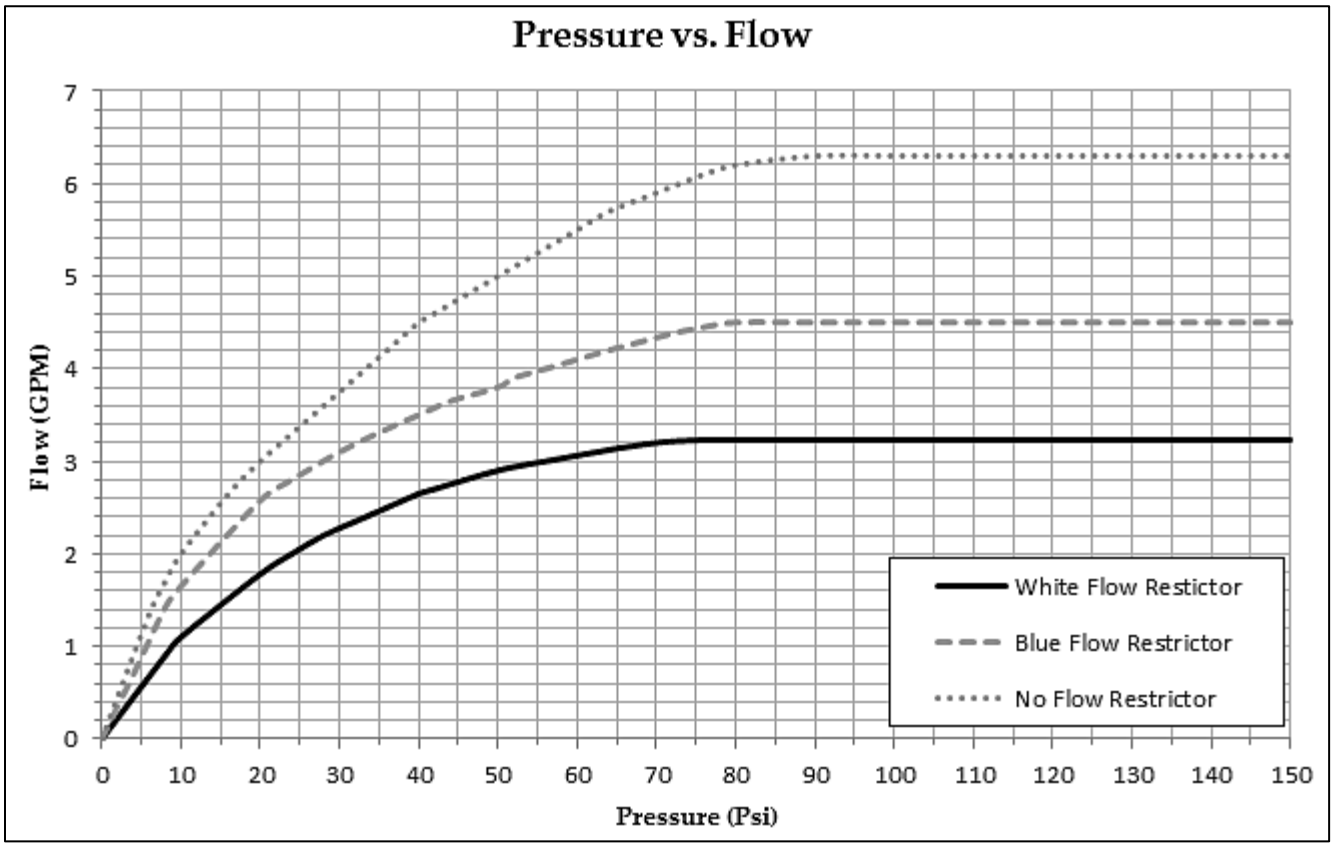

Figure 8 – Water Pressure vs. Flow Through the Restrictors – 140W Models

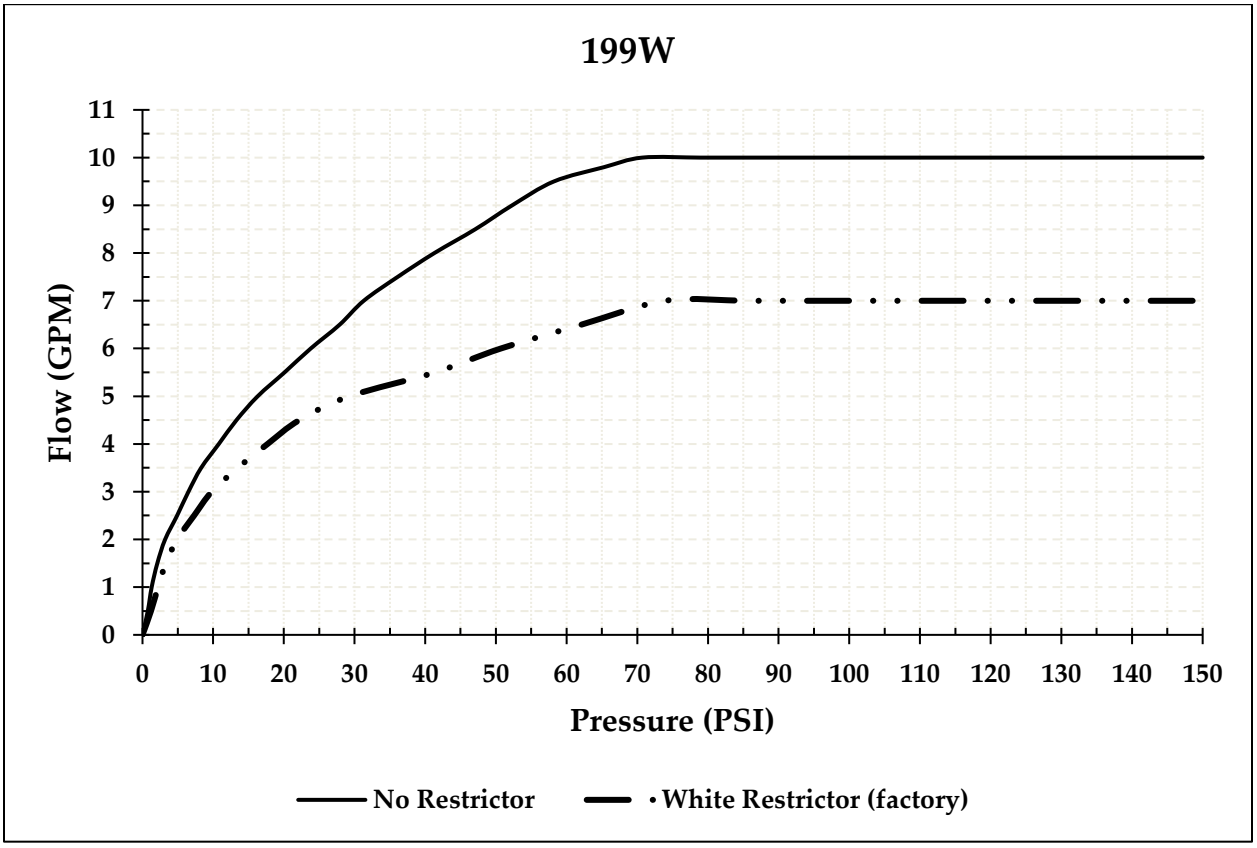

Figure 9 – Water Pressure vs. Flow Through the Restrictors – 199W Models

PART 5 – VENTING

⚠ DANGER
Vent this appliance in accordance with these instructions. Failure to do so will result in property damage, severe personal injury, or death.

⚠ WARNING
DO NOT mix vent systems or materials unless specifically told to do so in this manual.
DO NOT thermally insulate the exhaust vent or intake pipes.
DO NOT use an electric damper, vent damper, or draft hood with this appliance.
DO NOT locate the exhaust vent or intake pipe terminations where exposed to prevailing winds.
Moisture will be produced by the exhaust vent. Take precautions when determining exhaust vent termination. Moisture may fall from the vent termination to the ground and turn to ice in freezing conditions. Moisture or ice can produce a hazardous condition.
Exhaust condensate is acidic, and could deteriorate the surface below the exhaust vent termination. Ensure this surface is in good repair (sealed, painted, etc.) to prevent deterioration.
Pitch the exhaust vent pipe ¼" back to the appliance. This ensures that condensate in the exhaust vent returns to the appliance and drains properly.
Failure to follow these instructions could result in property damage, severe personal injury, or death.

A. INTAKE PIPE AND EXHAUST VENT GUIDELINES

1. Vent system must be installed in accordance with local codes, or, in absence of local codes, the National Fuel Gas Code, ANSI Z223.1 / NFPA 54 and/or CSA B149.1, Natural Gas and Propane Installation Code.

2. **For installation in Canada**, installer supplied plastic vent piping must comply with CAN/CGA B149.1 and be certified to the Standard for Type BH Gas Venting Systems, ULC-S636. Components of this listed system must not be interchanged with other vent systems or unlisted pipes or fittings. All plastic components and specified primers and glues must be from a single system manufacturer and must not be intermixed with another system manufacturer's products. Clean and dry all applicable surfaces before applying cement.

3. This appliance is designed to be installed in a power vent (using indoor air for combustion and vented to the outdoors) type, or as a direct vent (sealed combustion) type. In power vent installations, indoor air is used for combustion and exhaust gases are vented directly to the outdoors through a sealed exhaust vent piped through the wall or roof. In direct vent installations, combustion air must be supplied directly from the outdoors to the burner, and the flue (exhaust) gases should be vented directly to the outdoors through the wall or roof.

4. This appliance uses 2” or 3” diameter pipe for exhaust vent and intake pipe. It is important to ensure an airtight seal from the appliance collar to the vent terminations. See Table 9 for a list of Approved Vent Materials.

5. Do not install venting system components on the exterior of the building except as specifically required by these instructions.

- Vent terminals must be at least 1 foot from any door, window, or gravity inlet into the building.
- Maintain the correct clearance and orientation between the exhaust vent and intake pipe terminals.
- The exhaust vent and air intake terminals must be at the same height and their center lines must be spaced apart 1 foot minimum.
- The bottom of the exhaust vent and intake pipe terminals must be at least 1 foot above the normal snow accumulation level. In no case should these terminals be installed less than 1 foot above normal snow accumulation level.
- Do not install the exhaust vent terminals directly above windows or doors.
- Intake pipe terminal must not terminate in areas that might contain combustion air contaminates, such as near swimming pools.
- For sidewall venting, the minimum horizontal distance between adjacent exhaust vent terminations is 1 foot. It is recommended this distance be greater than 1 foot to better avoid frost damage to building surfaces.
- For roof venting, minimum horizontal distance between any adjacent exhaust vent termination is 1 foot.
- If the exhaust vent is to be terminated in a walled off area (such as a roof with a parapet wall), ensure the exhaust vent terminates a minimum of 10' from nearest wall and extends level with or above the top of the wall. This will ensure flue gas does not get trapped and possibly recirculated into the intake air pipe, which could contaminate the combustion air.
- Do not locate vent over public walkways, driveways, or parking lots. Condensate could drip and freeze, resulting in a slip hazard or damage to vehicles and machinery.
- DO NOT vent near soffit vents, crawl space vents, or other areas where condensate or vapor could create a nuisance or hazard or cause property damage.
- DO NOT vent where condensate vapor could cause damage or could be detrimental to the operation of regulators, relief valve, or other equipment.
- DO NOT vent the water heater in a chimney flue serving a separate appliance designed to burn solid fuel. The water heater may only be vented in vacant chimneys.
- Maximum Snow Level Determination: These installation instructions reference snow levels in establishing a minimum height for the installation of exhaust vent or air intake terminations. Snow levels shall be determined as follows:
  a. The installation location may, by ordinance, designate how snow levels are calculated in that location; or
  b. In the absence of specific ordinances, snow levels shall be calculated from the average monthly maximum depth of snow accumulation as indicated by the National Weather Service’s 10 year statistics for the installation location/geographical area.

In addition:

- Total length of vent piping shall not exceed the limits specified in this manual.
- The vent piping for this direct vented appliance is approved for zero clearance to combustible construction.
- The flue products coming from the exhaust vent will create a large plume when the heater is in operation. Avoid venting in areas that will affect neighboring buildings or be considered objectionable.
- DO NOT locate exhaust vent or intake pipe in a parking area where machinery may damage the pipe.

In the Commonwealth of Massachusetts and as Required by State and Local Codes:

- The vented gas fueled appliance shall not be installed so its combustion, ventilation, or dilution air is obtained from a bedroom or bathroom.
- Signage: Whenever any through-the-wall (horizontal or sidewall) vent is installed less than seven feet above the finished grade, a metal or plastic identification plate shall be permanently mounted to the exterior of the building at a minimum height of eight feet above grade directly in line with the exhaust vent terminal. The sign shall read, in print no less than 0.5 inches in size, “GAS VENT DIRECTLY BELOW. KEEP CLEAR OF ALL OBSTRUCTIONS”.
- Marking of Exhaust Vent and Intake Pipe: Piping used for ventilation, make-up, or combustion air intake shall be labeled as follows:
  a. Throughout the entire developed length:
     i. Labels must be placed every ten feet for exposed/visible piping; or
     ii. Labels must be placed every three feet for concealed piping.
  b. At all changes of direction;
  c. On each side of a penetration through a partition, wall or ceiling; and
  d. The labels shall be black lettering that:
     i. Indicates that the piping is used for ventilation, make-up, or combustion air intake, and
     ii. The letters shall be sized equal to a minimum of the pipe diameter. However, for piping with a diameter exceeding two inches, said lettering does not need to be larger than two inches.

⚠ WARNING
The building owner is responsible for keeping the exhaust and intake terminations free of snow, ice, or other potential blockages, as well as scheduling routing maintenance. Failure to keep the vent piping terminations clear and properly maintain the heater could result in property damage, severe personal injury, or death.
For each floor containing bedroom(s), a carbon monoxide detector and alarm shall be placed in the living area outside the bedrooms, as well as in the room that houses the heater. Detectors and alarms shall comply with NFPA 720 (latest edition). Failure to comply with these requirements could result in product damage, severe personal injury, or death.

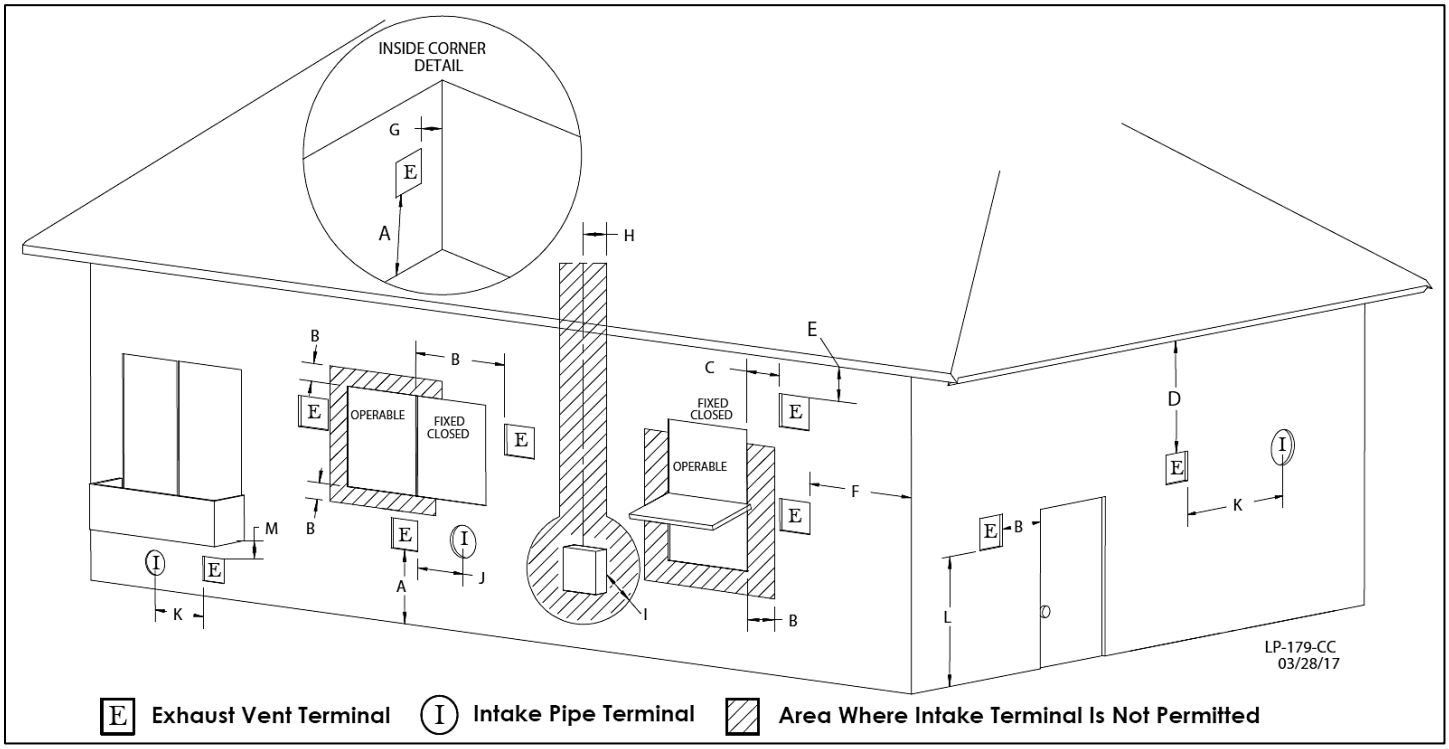

Figure 10 – Vent Termination Detail

	DESCRIPTION		US	CANADA
A	Clearance above grade, veranda, porch, deck, or balcony		1 foot (30 cm)	
B	Clearance to window or door that may be opened	Direct Vent	1 foot	3 feet (91 cm)
		Power Vent	4 feet below or to side of opening; 1 foot above opening	
C	Clearance to permanently closed window		*	
D	Vertical clearance to ventilated soffit located above the terminal within a horizontal distance of 2 feet from the center line of the terminal		*	
E	Clearance to unventilated soffit		*	
F	Clearance to outside corner		*	
G	Clearance to inside corner		*	
H	Clearance to each side of center line extended above meter / regulator assembly		*	
I	Clearance to service regulator vent outlet		*	Above a regulator within 3 feet (91 cm) horizontally of the vertical center line of the regulator vent outlet to a maximum vertical distance of 15 ft (4.5 m)
J	Clearance to non-mechanical air supply inlet to building or the combustion air inlet to any other appliance	Direct Vent	1 foot	3 feet (91 cm)
		Power Vent	4 feet below or to side of opening; 1 foot above opening	
K	Clearance to a mechanical air supply inlet		3 feet above if within 10 feet horizontally	6 feet (1.83 cm)
L	Clearance above paved sidewalk or driveway located on public property	Direct Vent	*	7 feet (2.13 m)
		Power Vent	7 feet	
M	Clearance under veranda, porch, deck, or balcony		*	1 foot (30 cm)

Table 10 – Vent Termination Clearances

***NOTE:** For clearances not specified in ANSI Z223.1/NFPA 54 or CAN/CSA-B 149.1, please use clearances in accordance with local installation codes and the requirements of the gas supplier.

B. APPROVED VENT MATERIALS

NOTICE

Consult Table 9 or the most recent edition of ANSI Z223.1/NFPA 54 or CAN/CGA B149.1 as well as all applicable local codes and regulations when selecting vent pipe materials.

APPROVED EXHAUST VENT AND INTAKE PIPE MATERIAL			
Item	**Material**	**Standards for Installation in:**	
		United States	**Canada**
Exhaust vent or Intake pipe and fittings	CPVC schedule 40	ASTM-D2846	PP, CPVC, and PVC venting must be ULC-S636 Certified. IPEX is an approved manufacturer in Canada, supplying vent material listed to ULC-S636.
	PVC schedule 40	ANSI/ASTM D1785	
	Polypropylene	ULC-S636, UL-1738	
	Stainless Steel AL29-4C	Certified for Category IV and direct vent appliance venting	Certified for Category IV and direct vent appliance venting
Pipe Cement	PVC	ANSI/ASTM D2564	IPEX System 636 Cements & Primers
	CPVC	ANSI/ASTM F493	
Pipe Primer	PVC / CPVC	ASTM F656	

⚠ DANGER

- The exhaust and intake components installed with this water heater must be used for near water heater piping BEFORE transitioning to the approved materials listed above. DO NOT REMOVE these installed components. Doing so WILL VOID warranty.
- PVC/CPVC pipe and fittings of the same diameter are considered interchangeable.
- Use of cellular core pipe PVC (ASTM F891), cellular core CPVC, or Radel® (polyphenysulfone) in nonmetallic venting systems is prohibited.
- DO NOT connect PVC/CPVC to Polypropylene without an approved vent connector.
- Any transition to Polypropylene MUST be done in the vertical within five (5) feet of the appliance.
- When installing AL29-4C vent piping, install a PVC-to-stainless adapter at the water heater vent connection, and at the termination when using an HTP PVC termination kit. DO NOT mix AL29-4C piping from different manufacturers unless using adapters specifically designed for the purpose by the manufacturer.
- Covering non-metallic vent pipe and fittings with thermal insulation is prohibited.
- DO NOT obstruct the flow of combustion or ventilation air.
- When using Pipe Cement/Primer, follow the instructions included with the Cement/Primer closely. Clean and dry all applicable surfaces before applying.

Failure to follow these directions will result in substantial property damage, severe personal injury, or death.

Table 11 – Approved Venting Materials

⚠ WARNING

Vent adaptors are not designed as load-bearing devices, and must not be used to support exhaust vent piping. All vent pipes must be properly connected, supported, and the exhaust must be pitched a minimum of ¼" per foot back to the appliance to allow drainage of condensate. Failure to properly support vent piping and follow the information in this statement could result in product damage, severe personal injury, or death.

CAUTION

High heat sources (sources generating heat 100ºF / 37ºC or greater, such as stove pipes, space heaters, etc.) may damage plastic components of the appliance as well as plastic vent pipe materials. Such damages ARE NOT covered by warranty. It is recommended to keep a minimum clearance of 8" from high heat sources. Observe heat source manufacturer instructions, as well as local, state, provincial, and national codes, laws, regulations and ordinances when installing this appliance and related components near high heat sources.

C. ALLOWED COMBINED VENT LENGTHS

2" COMBINED VENT LENGTH		3" COMBINED VENT LENGTH		MAXIMUM # OF 90º ELBOWS (2" and 3" VENT DIAMETERS)
MINIMUM	**MAXIMUM**	**MINIMUM**	**MAXIMUM**	6
14' (4.2M)	50' (15M)	14' (4.2M)	100' (30M)	

Table 12 – Approved Vent Lengths

The total equivalent length of exhaust vent and intake pipe should not exceed fifty (50) feet (15M) in 2" pipe, or one hundred (100) feet (30M) in 3" pipe.

a. The equivalent lengths of friction loss in elbows are listed below:
   - 5 feet (1.5M) for each additional 3" 90º elbow

- 2.5 feet (.75M) for each additional 3” 45º elbow
- 8 feet (2.4M) for each additional 2” 90º elbow
- 4 feet (1.2M) for each additional 2” 45º elbow
- Some terminations are considered elbows, and deduction should be applied. For example, a turndown 90º or an open T termination should be considered a 90º elbow.
- For 2” diameter installations, install a reducing coupling in a vertical section of pipe ABOVE the pipe clamp installed on the water heater. See Figure 8.

b. For example: If the 2” exhaust vent has two 90º elbows and 10 feet of PVC pipe we will calculate: Exhaust Vent Equivalent Length = (2x8) + 10 = 26 feet.

Further, if the 2” intake pipe has one 90º elbow, one 45º elbow, and 10 feet of PVC pipe, the following calculation applies: Intake Pipe Equivalent Length = 8 + 4 + 10 = 22 feet.

The Exhaust Vent Equivalent Length + the Intake Pipe Equivalent Length equal the Total Equivalent Length. In this example, the Total Equivalent Length is 48 feet.

c. The minimum Total Equivalent Length is fourteen (14) feet (4.2M).

NOTE: The intake pipe and exhaust vent lengths do not have to be of equal length. There is no balancing requirement between intake and exhaust.

⚠ WARNING
Vent adaptors are not designed as load-bearing devices, and must not be used to support exhaust vent piping. All vent pipes must be properly connected, supported, and the exhaust must be pitched a minimum of ¼” per foot back to the boiler to allow drainage of condensate. Failure to properly support vent piping and follow the information in this statement could result in product damage, severe personal injury, or death.
CAUTION
Failure to provide a minimum total vent length of 14 equivalent feet could result in property damage and improper appliance operation.

D. TIGHTENING APPLIANCE COLLAR TO EXHAUST VENT AND INTAKE PIPE

NOTE: The included 6” length of 3” CPVC pipe MUST BE INSTALLED in the exhaust vent connection BEFORE venting the appliance.

⚠ WARNING
Failure to properly install the included 6” length of 3” CPVC pipe BEFORE venting the appliance could result in product damage, severe personal injury, or death.

This appliance uses 2” or 3” diameter pipe for exhaust vent and intake pipe. In order to use 2” pipe, it is required to reduce pipe size in a vertical length of pipe with a reducing coupling (not included). Follow the steps below to install 2” or 3” pipe into the appliance collar. See Figure 11 for additional details.

1. Clean and dry the appliance connection. DO NOT use primer or cement on the appliance connection.
2. Push the included 6” length of CPVC pipe into the connection until it touches the bottom of the fitting.
3. Tighten the clamps using a screwdriver.
4. Ensure the pipe is secure before continuing installation.
5. For 2” installations, install a reducing coupling in a vertical section of pipe. See Figure 12.

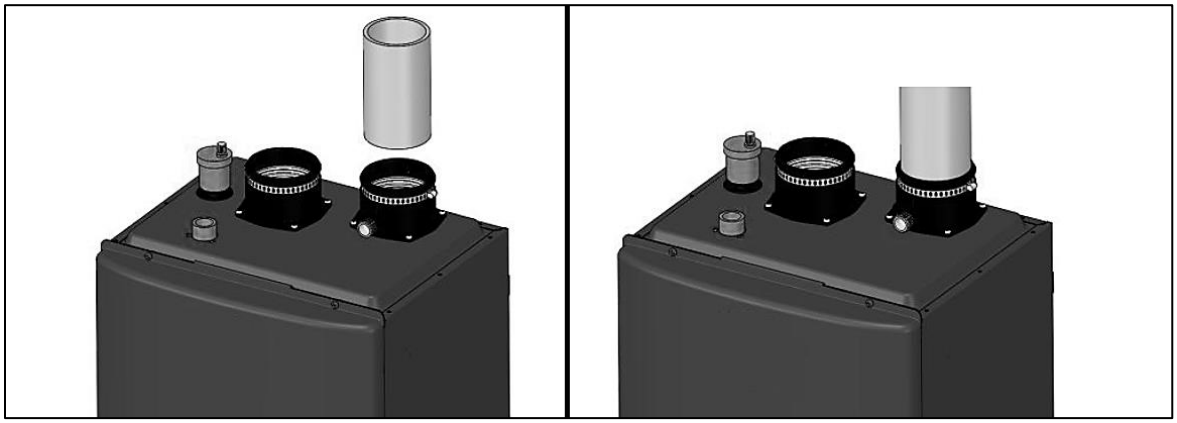

Figure 11 – Installing the 6” Length of CPVC into the Exhaust Vent Connection

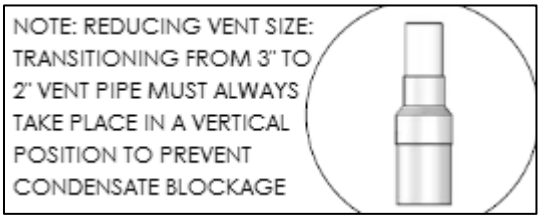

Figure 12 – Transitioning from 3” to 2” Vent Pipe

E. VENT TERMINATION

1. Direct Vent, Two Pipe Roof and Sidewall Vent Terminations

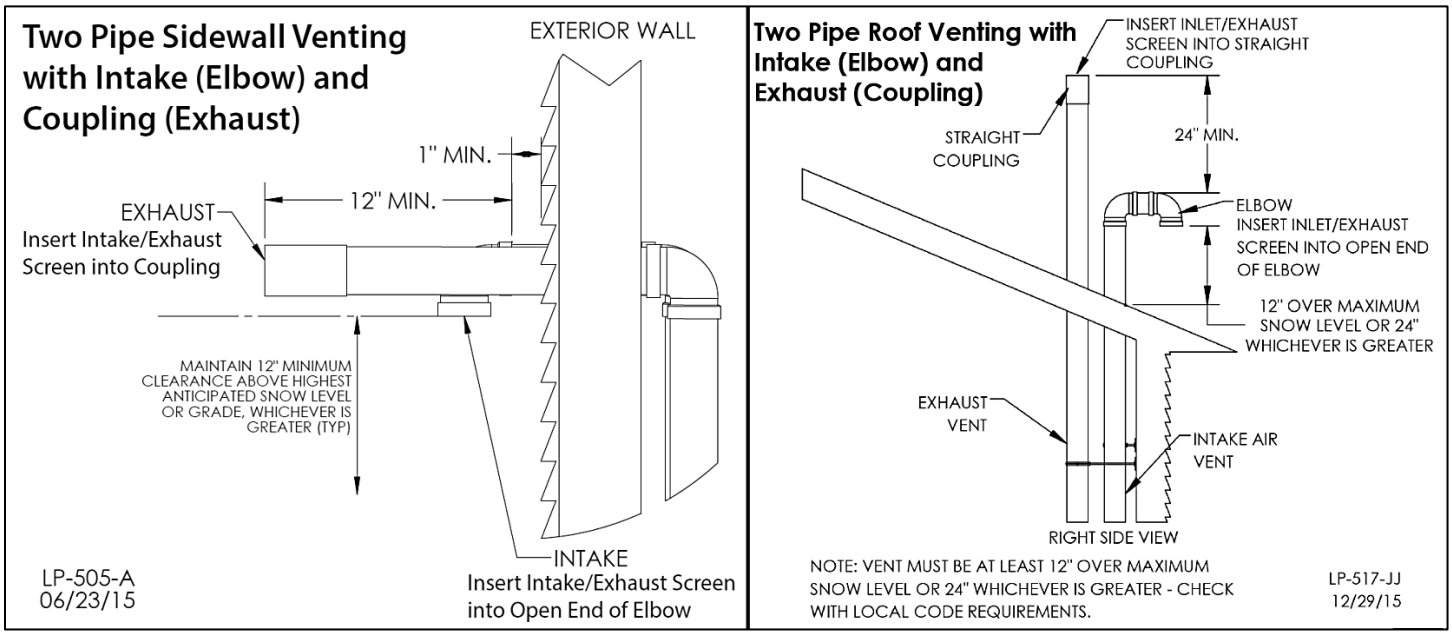

Figure 13 – Direct Vent, Roof and Sidewall Vent Terminations

⚠ WARNING

All vent pipes must be glued, properly supported, and the exhaust must be pitched a minimum of ¼” per foot back to the appliance to allow drainage of condensate. When placing support brackets on vent piping, the first bracket must be within 1 foot of the appliance and the balance at 4 foot intervals on the vent pipe. Appliance venting must be readily accessible for visual inspection for the first three feet from the appliance.

2. Direct Vent, Optional Horizontal and Vertical Vent Kits

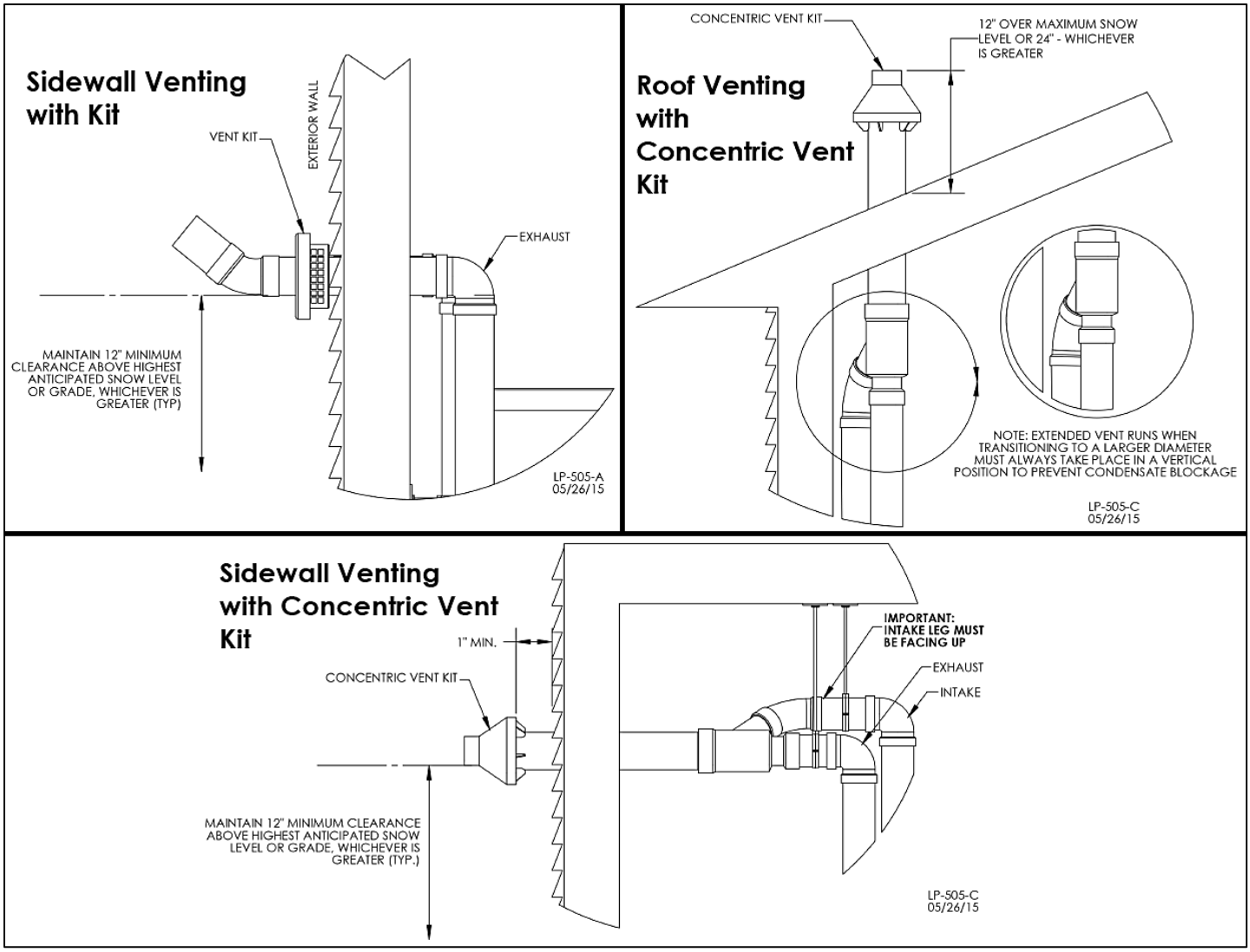

Figure 14 – Direct Vent, Vent Terminations (With Optional Kits)

⚠ WARNING

All vent pipes must be glued, properly supported, and the exhaust must be pitched a minimum of ¼" per foot back to the appliance to allow drainage of condensate. When placing support brackets on vent piping, the first bracket must be within 1 foot of the appliance and the balance at 4 foot intervals on the vent pipe. Appliance venting must be readily accessible for visual inspection for the first three feet from the appliance.

3. Screen Installation

After connecting the intake air and exhaust vent pipes, it is required to install the included screens into the exhaust vent and intake pipe terminations to prevent damages to the unit due to blockages. Clean the vent terminations and cement the screens into the terminations. See Figure 15 for installation detail.

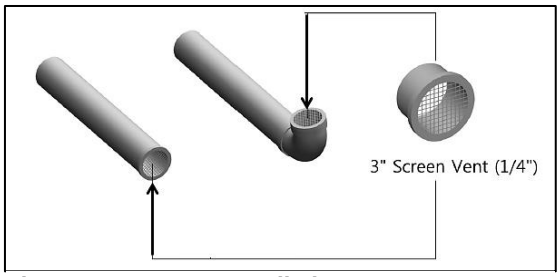

Figure 15 - Screen Installation

SAFETY INSTRUCTIONS

Do not connect any other appliance vents to the appliance exhaust vent or intake pipes.

4. Power Venting, Indoor Combustion Air Installation in Confined or Unconfined Space

This heater requires fresh, uncontaminated air for safe operation and must be installed in a mechanical room where there is adequate combustion and ventilating air. **NOTE: To prevent combustion air contamination, see Table 8.**

Combustion air from the indoor space can be used if the space has adequate area or when air is provided through a duct or louver to supply sufficient combustion air based on the heater input. **Never obstruct the supply of combustion air to the** heater**.** If the heater is installed in areas where indoor air is contaminated (see Figure 16) it is imperative that the heater be installed as direct vent so that all combustion air is taken directly from the outdoors into the heater intake connection.

Unconfined space is space with volume greater than 50 cubic feet per 1,000 Btu/hour (4.8 cubic meters per kW) of the total input rating of all fuel-burning appliances installed in that space. Rooms connected directly to this space, through openings not furnished with doors, are considered part of the space.

Confined space is space with volume less than 50 cubic feet per 1,000 Btu/hour (4.8 cubic meters per kW) of the total input rating of all fuel-burning appliances installed in that space. Rooms connected directly to this space, through openings not furnished with doors, are considered part of the space.

When drawing combustion air from inside a conventionally constructed building to a confined space, such space should be provided with two permanent openings: one located 6” (15 cm) below the space ceiling, the other 6” (15cm) above the space floor. Each opening should have a free area of one square inch per 1,000 Btu/hr (22cm^2/kW) of the total input of all appliances in the space, but not less than 100 square inches (645cm^2). If the confined space is within a building of tight construction, air for combustion must be obtained from the outdoors as outlined in the Venting section of this manual. See Figure 17.

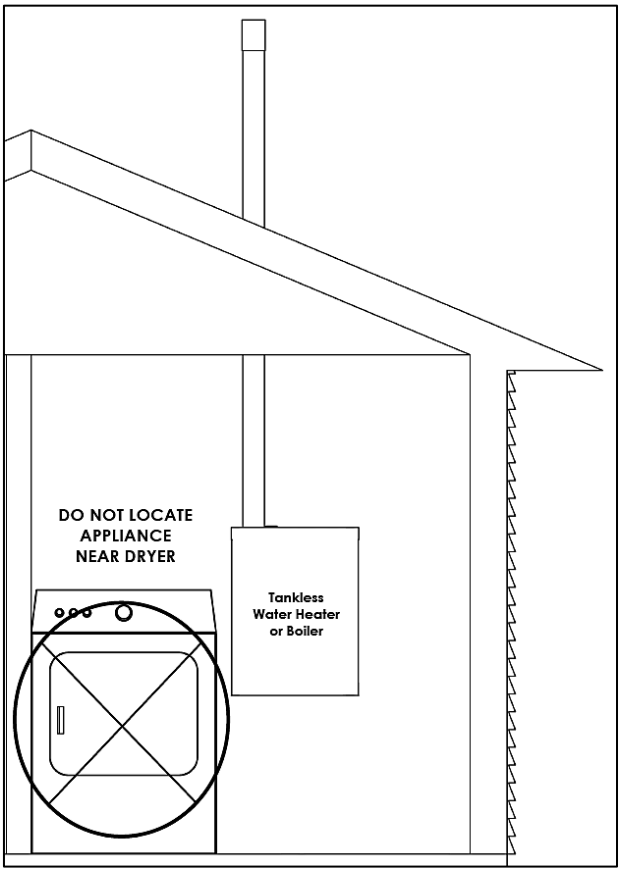

Figure 16 – Do Not Install in a Contaminated Space

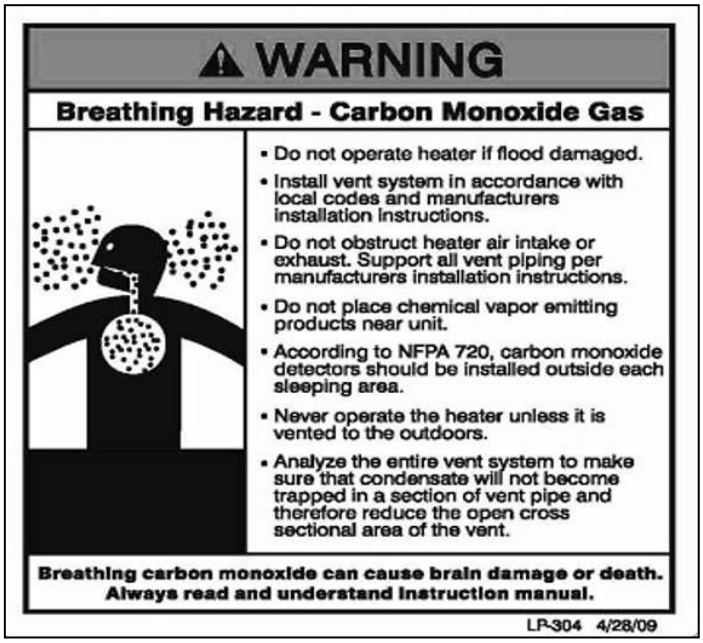

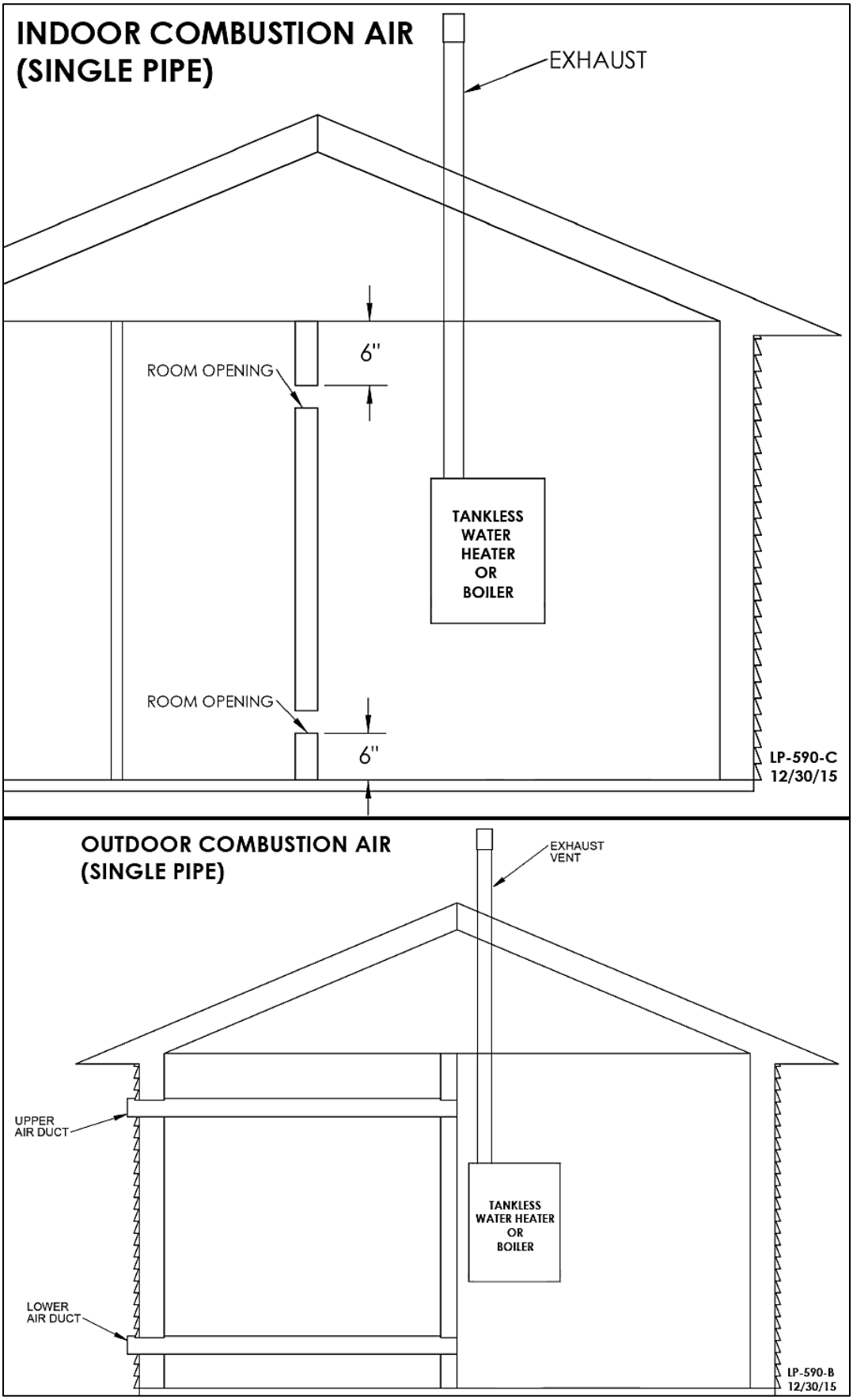

Figure 17 – NOTE: These drawings are meant to demonstrate system venting only. The installer is responsible for all equipment and detailing required by local codes.

PART 6 – INSTALL THE CONDENSATE DRAIN

1. Due to its efficient design, the appliance produces condensate (water) as a normal by-product. This condensate is acidic, with a pH level between 3 and 4. This condensate must be drained away from the appliance and disposed in accordance with all local regulations.

2. Use corrosion-resistant materials approved by the Authority Having Jurisdiction (AHJ) to drain condensate. In the absence of an AHJ, the included flexible plastic hose, or field supplied ½" PVC and CPVC drain pipe complying with ASTM D1785, F441, or D2665 may be used. Cement must comply with ASTM D2564 for PVC or F493 for CPVC. For Canadian applications, use CSA or ULC certified PVC or CPVC pipe, fittings, and cement.

3. Local building codes may require an in-line neutralizer to be installed (not included) to treat the condensate. Follow all the installation instructions included with the neutralizer. If a neutralizer is installed, periodic replacement of the limestone (or neutralizing agent) will be required. The rate of depletion of the limestone varies with usage of the appliance. During the first year of appliance operation, check the neutralizer every few months for depletion.

4. Route the drain line to a nearby floor drain, laundry tub, or condensate pump.

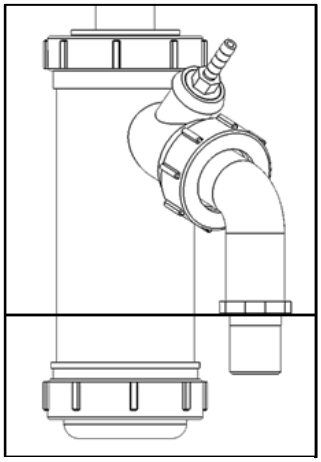

Figure 18 – Internal Condensate Trap

NOTE: If a nearby laundry tub is used as a disposal for waste water from the washing machine, draining the condensate into this tub allows the soapy water discharge to neutralize the acidic condensate.

5. An error will appear on the appliance display if condensate line is blocked. The appliance will not operate with a blocked condensate line. It is extremely important to have this condition repaired by a qualified service technician.

NOTE: This appliance has an internal condensate trap that must be cleaned and maintained. See Maintenance section of this manual for instructions on maintaining the trap.

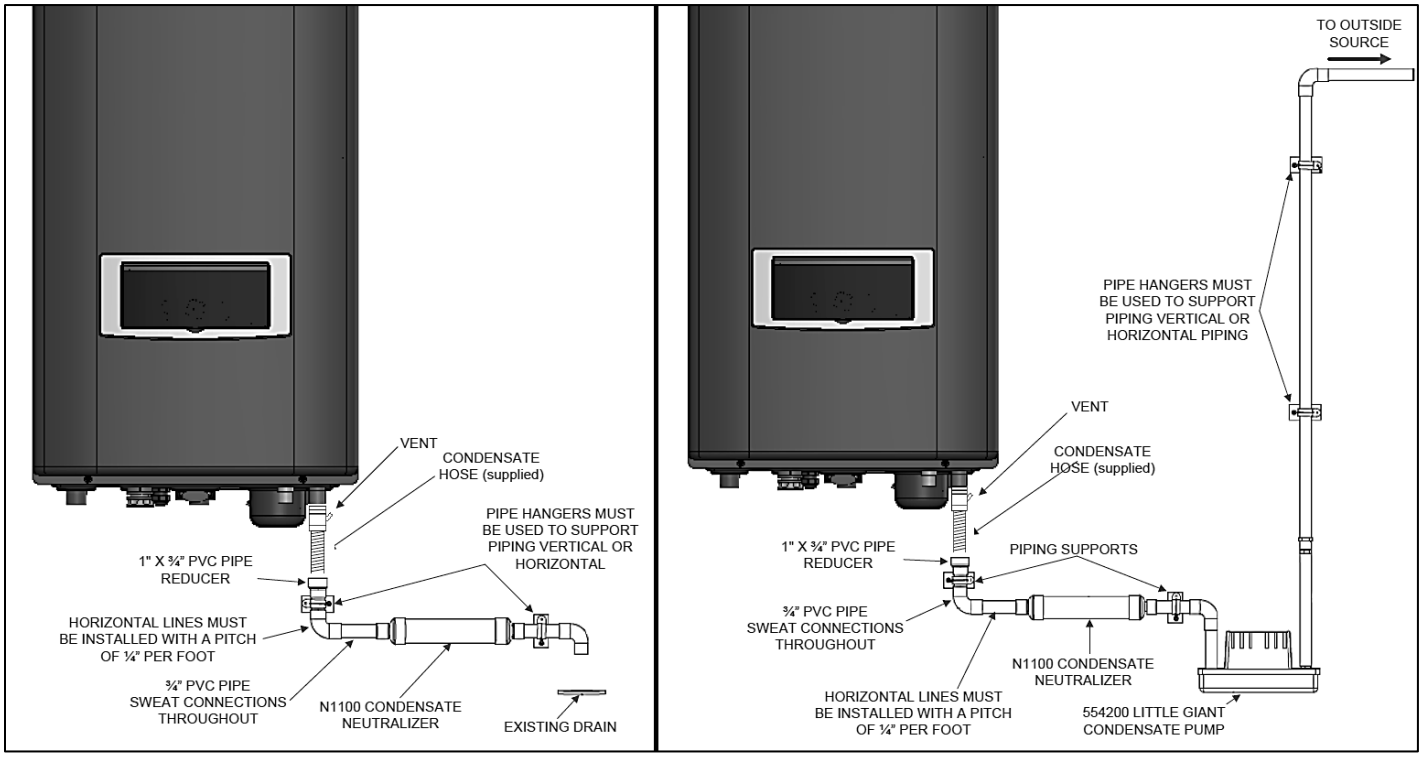

Figure 19 – Condensate Piping with Condensate Neutralizer / Condensate Piping with Condensate Neutralizer and Pump

NOTES:
1. Condensate line must be pitched at least 1/4" per foot to properly drain. If this cannot be done, or a very long length of condensate hose is used, you must increase the condensate line to a minimum of 1" ID and place a tee in the line after the condensate neutralizer to properly reduce vacuum lock in the drain line.
2. Plastic pipe should be the only material used for the condensate line. Steel, brass, copper, or other materials will be subject to corrosion or deterioration.
3. NEVER install condensate lines outside. It is very important that the condensate line is not exposed to freezing temperatures or any type of blockage. Damages due to frozen or blocked condensate lines ARE NOT covered by warranty.
4. Support of the condensate line may be necessary to avoid blockage of the condensate flow.

CAUTION
If using a condensate pump, select one approved for use with condensing appliances and furnaces. The pump should have an overflow switch to prevent property damage from condensate spillage.

CAUTION
It is very important that the condensate piping be no smaller than ¾". To prevent sagging and maintain pitch, condensate piping should be supported with pipe supports, and pitched ¼" per foot to allow for proper drainage.

CAUTION
The condensate line must remain unobstructed, allowing free flow of condensate. If condensate freezes in the line, or if line is obstructed in any other manner, condensate can exit from the tee, resulting in potential water damage to property.

PART 7 – GAS PIPING

⚠ WARNING
FIRE AND/OR EXPLOSION HAZARD To avoid serious injury or death, the gas line installation and the gas line inlet pressure test must be done by a licensed professional.
Always match the appliance with the type of gas supplied to the unit (natural gas or LP gas). This appliance must be converted into propane operation unless specifically manufactured for use with propane. Follow Gas Conversion Manual instructions (separate document). Propane ready appliances have the suffix "LP" after the model serial number.
Make sure the gas line pressures are within normal limits. Pressures outside normal limits can result in poor performance and hazardous operating conditions.
This appliance must be converted into propane operation unless it is specifically manufactured to operate on propane. Propane-ready appliances have the suffix "LP" after the model serial number. Failure to ensure the appliance is set to operate on the provided gas supply could result in property damage, personal injury, or death.

A. GAS PIPE SIZING TABLES

1. Gas Pipe Sizing

This information is for reference use only. Refer to gas pipe manufacturer specifications for actual delivery capacity. The DOE standard for Natural Gas is 1100 BTU/ft^3. Contact the local gas supplier for actual BTU/ft^3 rating.

2. Natural Gas Pipe Sizing

The following tables list maximum capacity of pipe in cubic feet of gas per hour for gas pressures of 0.5 psi or less and a pressure drop of 0.5 inches water column, based on a 0.60 specific gravity for natural gas.

Maximum Natural Gas Delivery Capacity – Length of Corrugated Stainless Steel Pipe in Feet										
Pipe Size	**Cubic Feet per Hour (0.60 Specific Gravity, 0.5 WC Pressure Drop)**									
	10	**20**	**30**	**40**	**50**	**60**	**80**	**100**	**150**	**200**
½"	82	58	47	41	37	37	29	26	20	18
¾"	192	137	112	97	87	80	69	62	48	44
1"	383	269	218	188	168	153	132	118	91	82
1 ¼"	639	456	374	325	292	267	232	208	171	148
1 ½"	1260	888	723	625	559	509	440	393	320	277
2"	2930	2080	1700	1470	1320	1200	1040	933	762	661

Table 13 – Natural Gas Delivery Capacity – Corrugated Stainless Steel Pipe – Refer to ANSI Z223.1 – National Fuel Gas Code, Latest Edition

Maximum Natural Gas Delivery Capacity – Length of Black Iron Pipe (Sch. 40 Metallic) in Feet										
Pipe Size	**Cubic Feet per Hour (0.60 Specific Gravity, 0.5 WC Pressure Drop)**									
	10	**20**	**30**	**40**	**50**	**60**	**80**	**100**	**150**	**200**
½"	172	118	95	81	72	65	56	50	40	34
¾"	360	247	199	170	151	137	117	104	83	71
1"	678	466	374	320	284	257	220	195	157	134
1 ¼"	1390	957	768	657	583	528	452	400	322	275
1 ½"	2090	1430	1150	985	873	791	677	600	482	412
2"	4020	2760	2220	1900	1680	1520	1300	1160	928	794

Table 14 – Natural Gas Delivery Capacity – Black Iron Pipe – Refer to ANSI Z223.1 – National Fuel Gas Code, Latest Edition

3. LP (Liquid Propane) Gas Pipe Sizing

The following is intended for use for piping between a Single or Second Stage (Low Pressure) Regulator and the appliance. The following tables list maximum capacity of pipe in cubic feet of gas per hour for an inlet pressure of 11 inches water column and specific pressure drop of 0.5 inches water column based on 1.5 specific gravity for liquid propane.

Maximum Liquid Propane Delivery Capacity – Length of Corrugated Stainless Steel Pipe in Feet										
Pipe Size	**Cubic Feet per Hour (0.60 Specific Gravity, 0.5 WC Pressure Drop)**									
	10	**20**	**30**	**40**	**50**	**60**	**80**	**100**	**150**	**200**
½”	129	91	74	64	58	53	45	41	31	28
¾”	303	216	177	153	137	126	109	98	75	69
1”	605	425	344	297	265	241	208	186	143	129
1 ¼”	971	661	528	449	397	359	307	270	217	183
1 ½”	1990	1400	1140	988	884	805	696	621	506	438
2”	4640	3290	2680	2330	2080	1900	1650	1480	1210	1050

Table 15 – Liquid Propane Delivery Capacity – Corrugated Stainless Steel Pipe – Refer to ANSI Z223.1 – National Fuel Gas Code, Latest Edition

Maximum Liquid Propane Delivery Capacity – Length of Black Iron Pipe (Sch. 40 Metallic) in Feet										
Pipe Size	**Cubic Feet per Hour (0.60 Specific Gravity, 0.5 WC Pressure Drop)**									
	10	**20**	**30**	**40**	**50**	**60**	**80**	**100**	**150**	**200**
½”	291	200	160	137	122	110	101	94	84	67
¾”	608	418	336	287	255	231	212	197	175	140
1”	1150	787	632	541	480	434	400	372	330	265
1 ¼”	2350	1620	1300	1110	985	892	821	763	677	543
1 ½”	3520	2420	1940	1660	1480	1340	1230	1140	1010	814
2”	6790	4660	3750	3210	2840	2570	2370	2200	1950	1570

Table 16 – Liquid Propane Delivery Capacity – Black Iron Pipe – Refer to ANSI Z223.1 – National Fuel Gas Code, Latest Edition

B. GAS CONNECTION REQUIREMENTS

1. The gas connection fitting on the appliance is ½” male NPT. A ½” X ¾” Bell Coupling has been provided with the appliance to aid installation. **NOTE:** The pipe size must not be less than ½”.

2. The supply line must be sized for the maximum output of the appliance being installed. If there are additional gas appliances from the main supply line, measure the size of the supply line according to the COMBINED total maximum BTUH draw for the appliances as if they were operating at the same time.

3. Measure the length of the gas supply line from the gas meter to the appliance. Appliance must be installed downstream of the gas meter to ensure adequate gas supply. Use the tables in this manual or refer to the gas line manufacturer’s sizing information to determine the correct supply pipe size.

4. A manual gas shut-off valve should be installed in the gas supply line close to the appliance. See Figure 20 for detail.

5. To facilitate any future maintenance, it is also recommended that an approved gas union fitting be installed in the supply line between the shut-off valve and the connection on the appliance.

6. Test the gas pressure to make sure it meets the minimum standards and does not exceed the maximum standards of the appliance.

7. Leak test the gas line pipe before placing the appliance in operation. Only use approved leak detector liquid solutions to check for leaks.

8. Do not operate the appliance until all connections have been completed and the heat exchanger is filled with water.

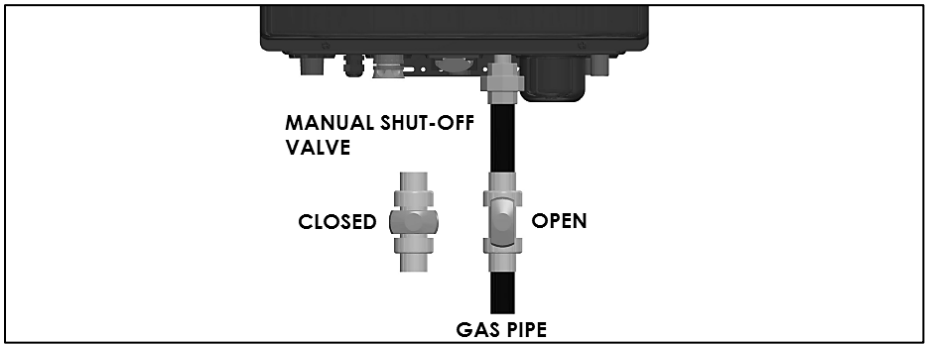

Figure 20 – Gas Line with Shut-Off Valve Detail

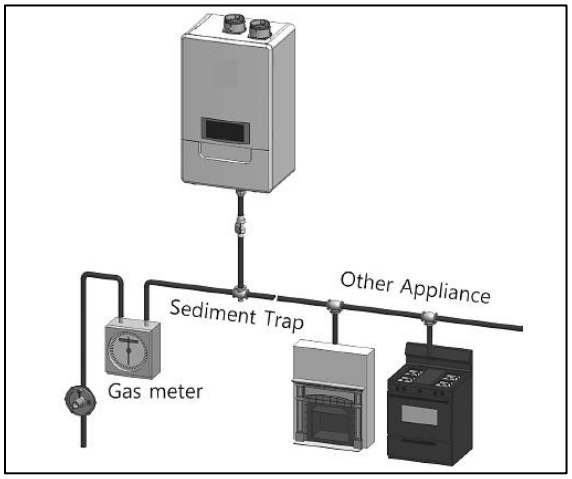

Figure 21 – Natural Gas Piping Installation – NOTE: Capacity to be Not Less than Total Capacity of Connected Appliances

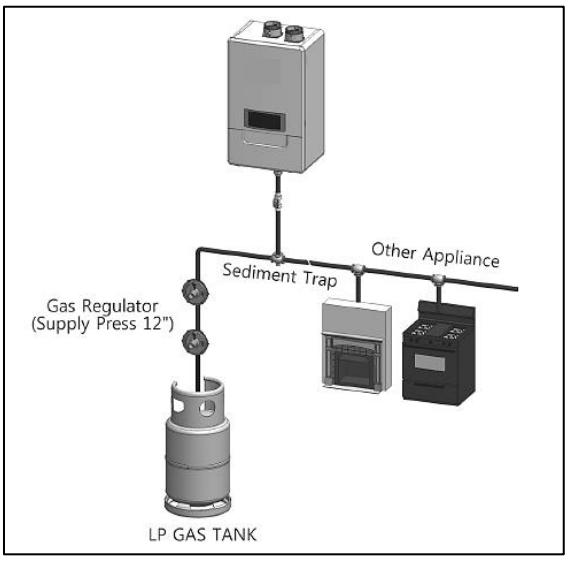

Figure 22 – LP Gas Piping Installation – NOTE: Capacity to be Not Less than Total Capacity of Connected Appliances

PART 8 – WATER PIPING

A. GENERAL PLUMBING CONNECTION GUIDELINES

- Pipe material must be suitable to meet local codes and industry standards.
- The pipe must be cleaned and without blemish before any connections are made.
- Do not apply a torch within 12” of the appliance. Doing so could damage the appliance. Such damages ARE NOT covered by product warranty.
- The size of the hot water pipe should be ¾” diameter and the central heating water pipe should be 1” in diameter.
- To ease future maintenance isolation valves are recommended on both the CH and DHW loops.
- All piping should be insulated.

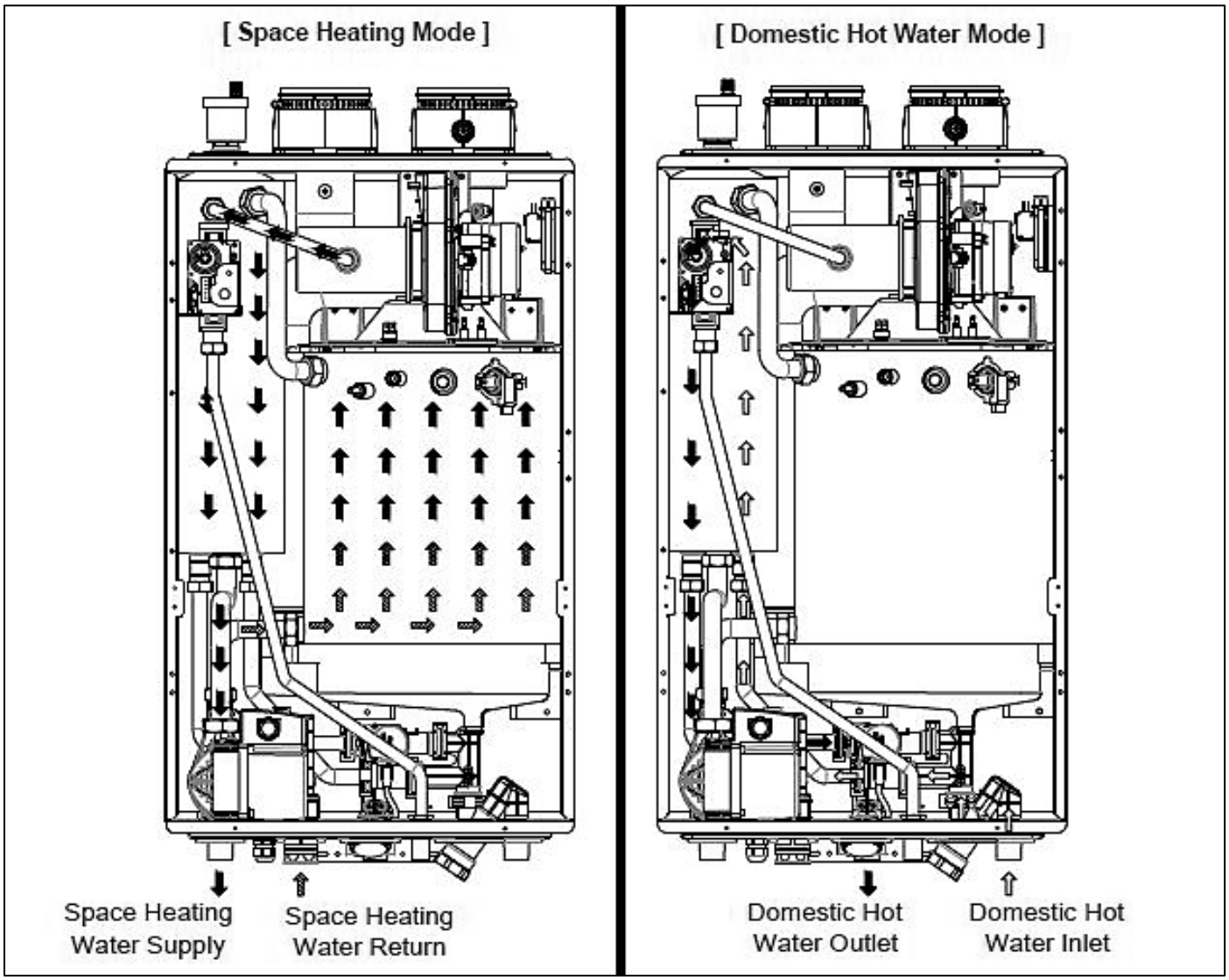

Figure 23 – Operating Description – Water Flow

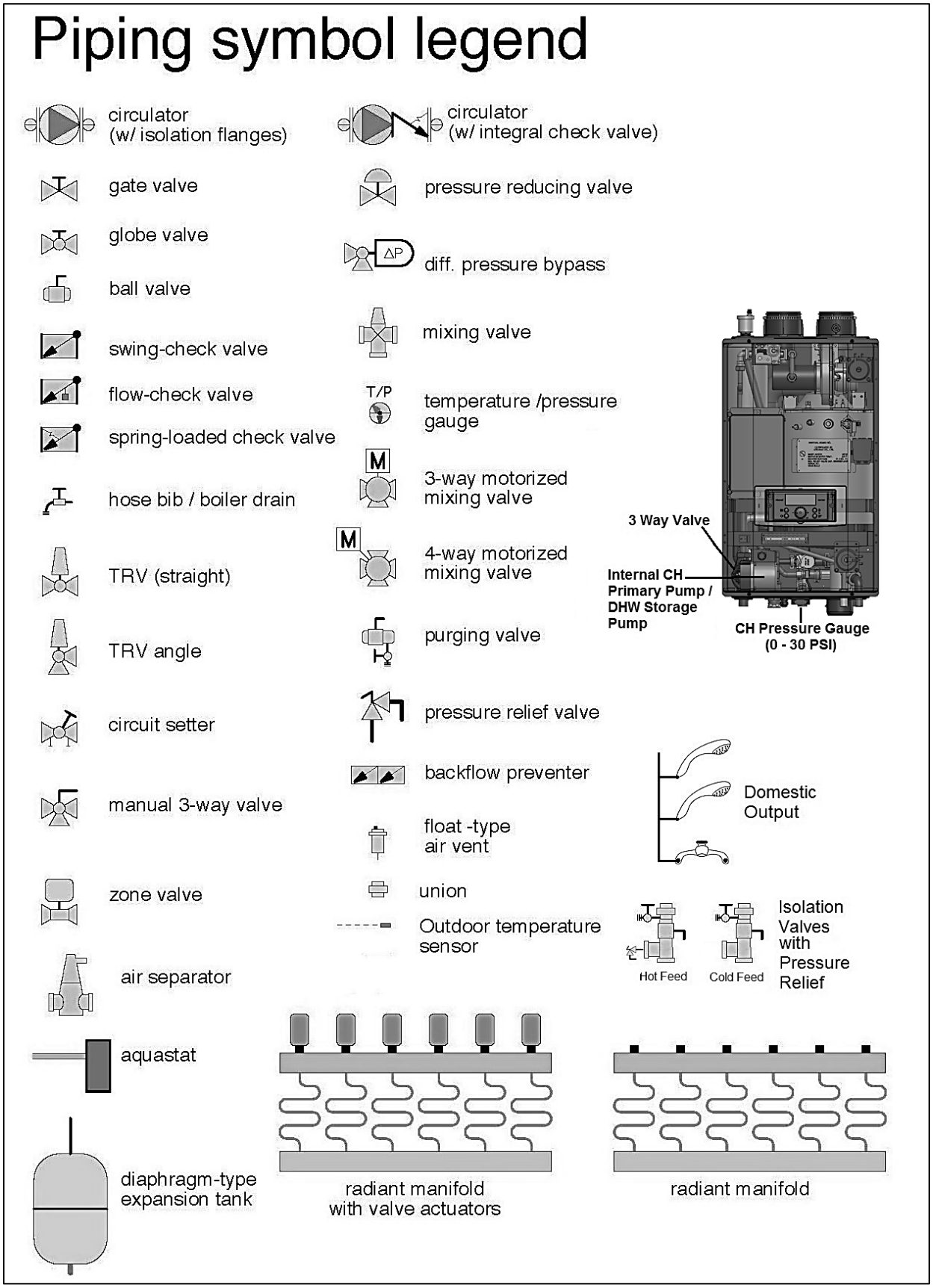

Figure 24 – Piping Legend

B. DHW PIPING

Use both thread tape and pipe dope to connect to the ¾" domestic water inlet and outlet. A shut off valve between the city water supply and DHW inlet is recommended for ease of service. HTP offers threaded ¾" DHW tankless isolation valves with DHW pressure relief valve for ease of installation and future service. See Optional Equipment, this manual, for part numbers.

It may be recommended to use a back flow preventer – check local codes. If a back flow preventer or a no return valve is used, a thermal expansion tank must be installed on the cold water supply between the appliance and valve.

⚠ WARNING

To control thermal expansion, a thermal expansion tank suitable for potable water should be installed in systems with an installed backflow preventer. DO NOT use a closed type expansion tank. Follow expansion tank manufacturer's specifications to properly size an expansion tank to the installation. Failure to properly accommodate thermal expansion could result in property damage, severe personal injury, or death.

C. CENTRAL HEATING PIPING SYSTEM WATER PIPING METHODS

EXPANSION TANK AND MAKE-UP WATER

1. Ensure that the expansion tank is designed and sized to correctly handle system water volume and temperature.

⚠ WARNING

Expansion tanks must be sized according to total system volume. This includes all length of pipe, all fixtures, appliances, etc. Failure to properly size system expansion could result in wasted time, money, and possible property damage, personal injury, or death.

CAUTION

Undersized expansion tanks cause system water to be lost from the relief valve, causing make-up water to be added. Eventual appliance failure can result due to excessive make-up water addition. **SUCH FAILURE IS NOT COVERED BY WARRANTY.**

2. The expansion tank must be located following recognized design methods. See expansion tank manufacturer's instructions for details.

3. Connect the expansion tank to the air separator only if the air separator is on the suction side of the circulator. Always install the system fill connection at the same point as the expansion tank connection to the system.

⚠ CAUTION

DO NOT install automatic air vents on closed type expansion tank systems. Air must remain in the system and return to the tank to provide an air cushion. An automatic air vent would cause air to leave the system, resulting in improper operation of the expansion tank.

DIAPHRAGM (OR BLADDER) EXPANSION TANK

Always install an automatic air vent on top of the air separator to remove residual air from the system.

CAUTION

Use at least the MINIMUM pipe size for all appliance loop piping (connecting appliance to and from the primary/secondary connection). DO NOT pipe the appliance in any configuration other than primary/secondary. All piping methods shown in this manual use primary/secondary connection. This is to avoid the possibility of inadequate flow through the appliance. Using less than the required minimum pipe size and piping in anything other than a primary/secondary installation could result in system problems, property damage, and premature appliance failure. Such problems ARE NOT covered by product warranty.

Use both thread tape and pipe dope to connect to the 1" heating water outlet and inlet.

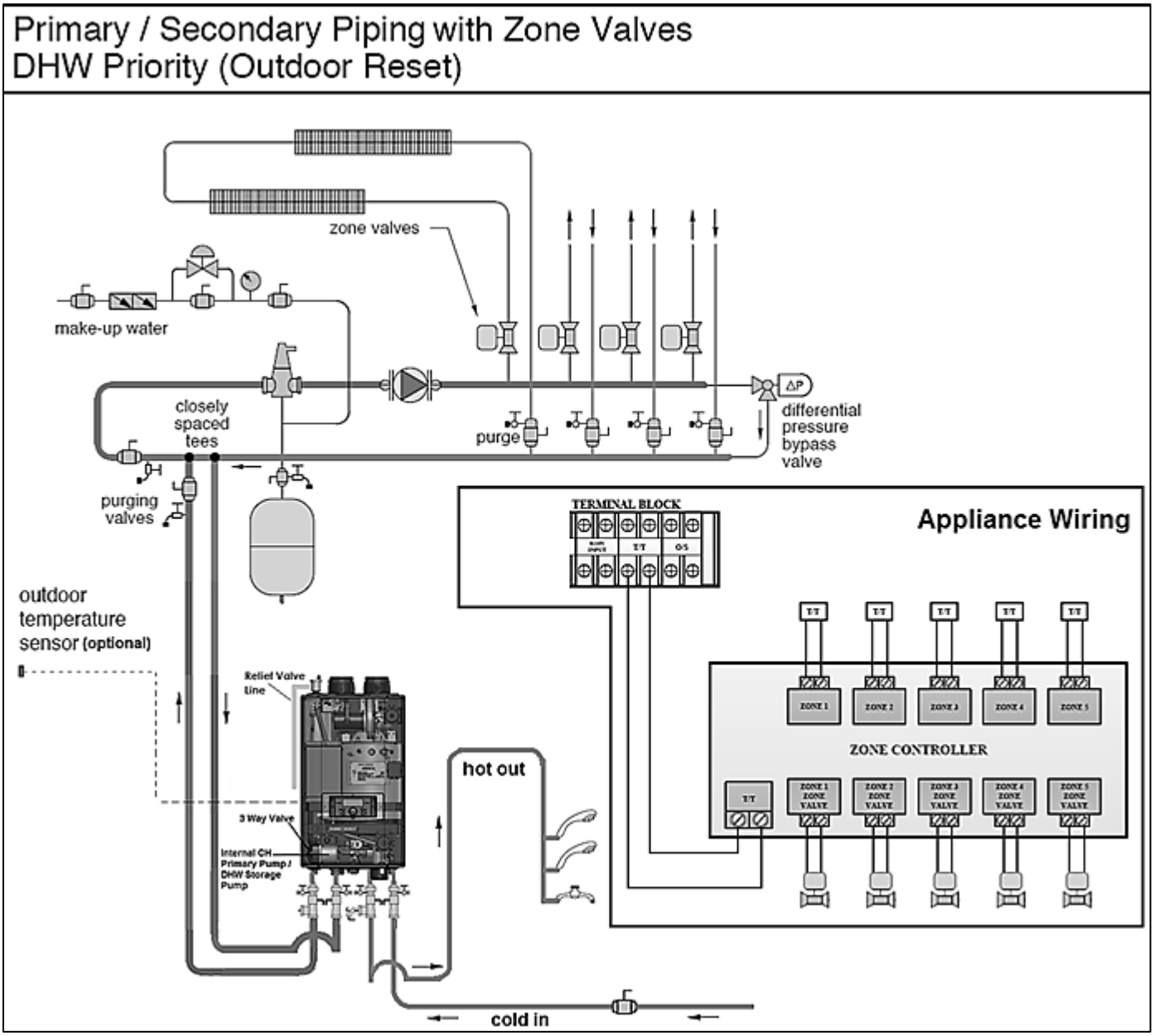

Figure 25 – CH and DHW Piping - NOTES:

1. This drawing is meant to show system piping concept only. Installer is responsible for all equipment and detailing required by local codes.
2. All closely spaced tees shall be within 4 pipe diameters center to center spacing.
3. A minimum of 6 pipe diameters of straight pipe shall be installed upstream and downstream of all closely spaced tees.
4. The **minimum** pipe size of DHW piping should be ¾" diameter and CH piping should be 1" in diameter.
5. Circulators are shown with isolation flanges. The alternative is standard flanges with full port ball valves. Purge valves can be used with circulator flanges as an alternative.
6. Piping shown is Primary/Secondary. System flow (secondary loop) must be greater than the appliance's primary loop flow.
7. Install a minimum of 12 diameters of straight pipe upstream of all circulators.
8. **VERY IMPORTANT** – Minimum flow rates outlined in this manual must be maintained through the heat exchanger to minimize short cycling.
9. In a valve-based system, each heating zone has a zone valve which opens when that zone calls for heat. Each zone thermostat is wired to its corresponding zone valve. Contacts in the zone valves provide a signal to the appliance to operate when there is a call for heat.
10. **Unit is equipped with built-in primary pump for the heating loop.** This pump is sized to insure proper flow rate through the appliance heat exchanger and related piping. On long pipe runs, it is recommended to keep the pump at maximum speed (setting 3). DO NOT lower it from the factory default.
11. **NOTE:** DO NOT INSTALL a flow check or a pump with flow check on the return line of the primary loop going to the appliance. This will isolate the appliance from the expansion tank, causing pressure to build up in the unit and the Pressure Relief Valve to discharge.

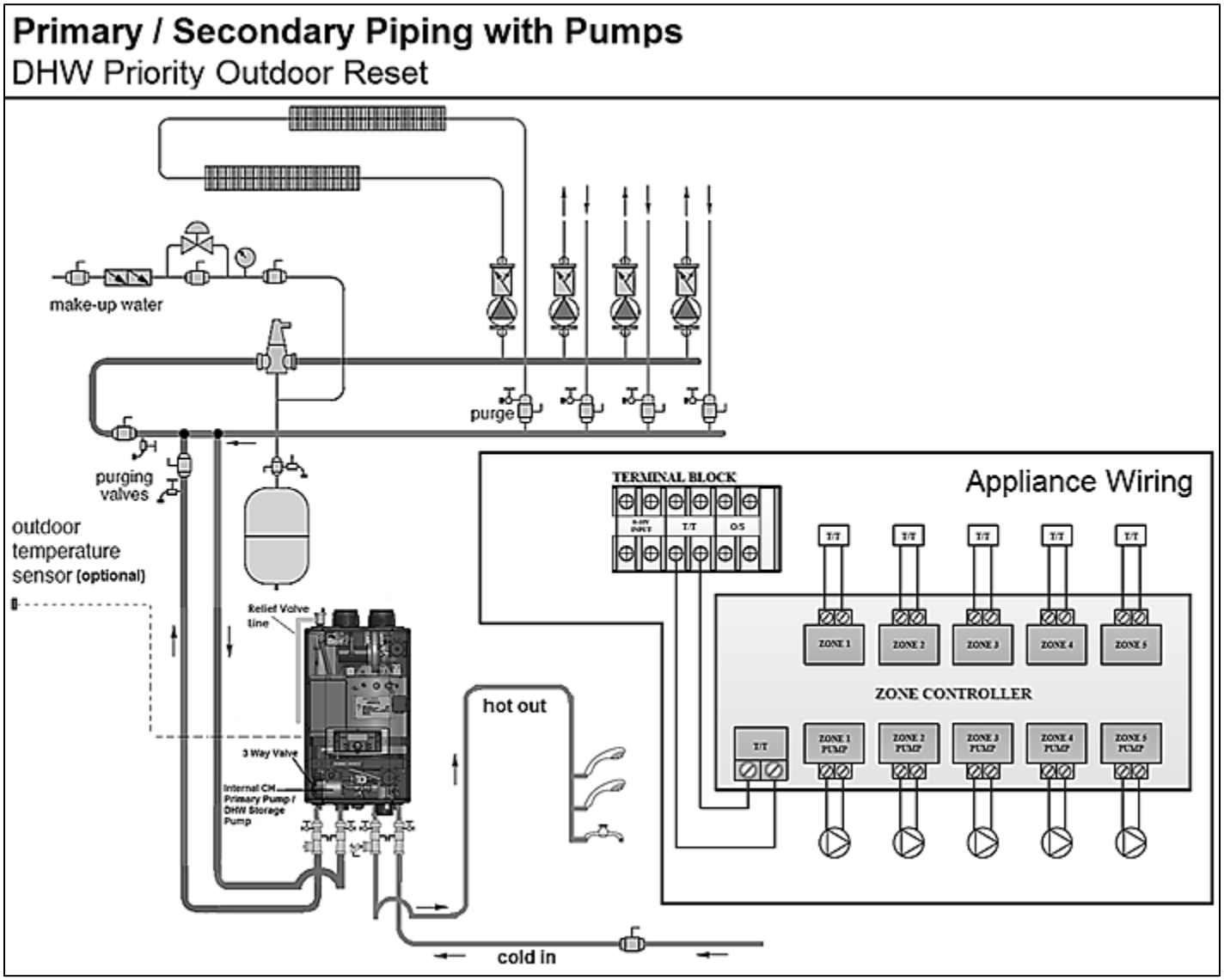

Figure 26 – CH Piping – Zoning with Pumps

NOTES:

1. This drawing is meant to show system piping concept only. Installer is responsible for all equipment and detailing required by local codes.
2. All closely spaced tees shall be within 4 pipe diameters center to center spacing.
3. A minimum of 6 pipe diameters of straight pipe shall be installed upstream and downstream of all closely spaced tees.
4. The **minimum** pipe size of DHW piping should be ¾" diameter and CH piping should be 1" in diameter.
5. Circulators are shown with isolation flanges. The alternative is standard flanges with full port ball valves. Purge valves can be used with circulator flanges as an alternative.
6. Piping shown is Primary/Secondary. System flow (secondary loop) must be greater than the appliance's primary loop flow.
7. Install a minimum of 12 diameters of straight pipe upstream of all circulators.
8. **VERY IMPORTANT** – Minimum flow rates outlined in this manual must be maintained through the heat exchanger to minimize short cycling.
9. Each heating zone of a pump-based system has its own circulator with turns on when a zone thermostat calls for heat.
10. **Unit is equipped with built-in primary pump for the heating loop.** This pump is sized to insure proper flow rate through the appliance heat exchanger and related piping. On long pipe runs, it is recommended to keep the pump at maximum speed (setting 3). DO NOT lower it from the factory default.
11. **NOTE:** DO NOT INSTALL a flow check or a pump with flow check on the return line of the primary loop going to the appliance. This will isolate the appliance from the expansion tank, causing pressure to build up in the unit and the Pressure Relief Valve to discharge.

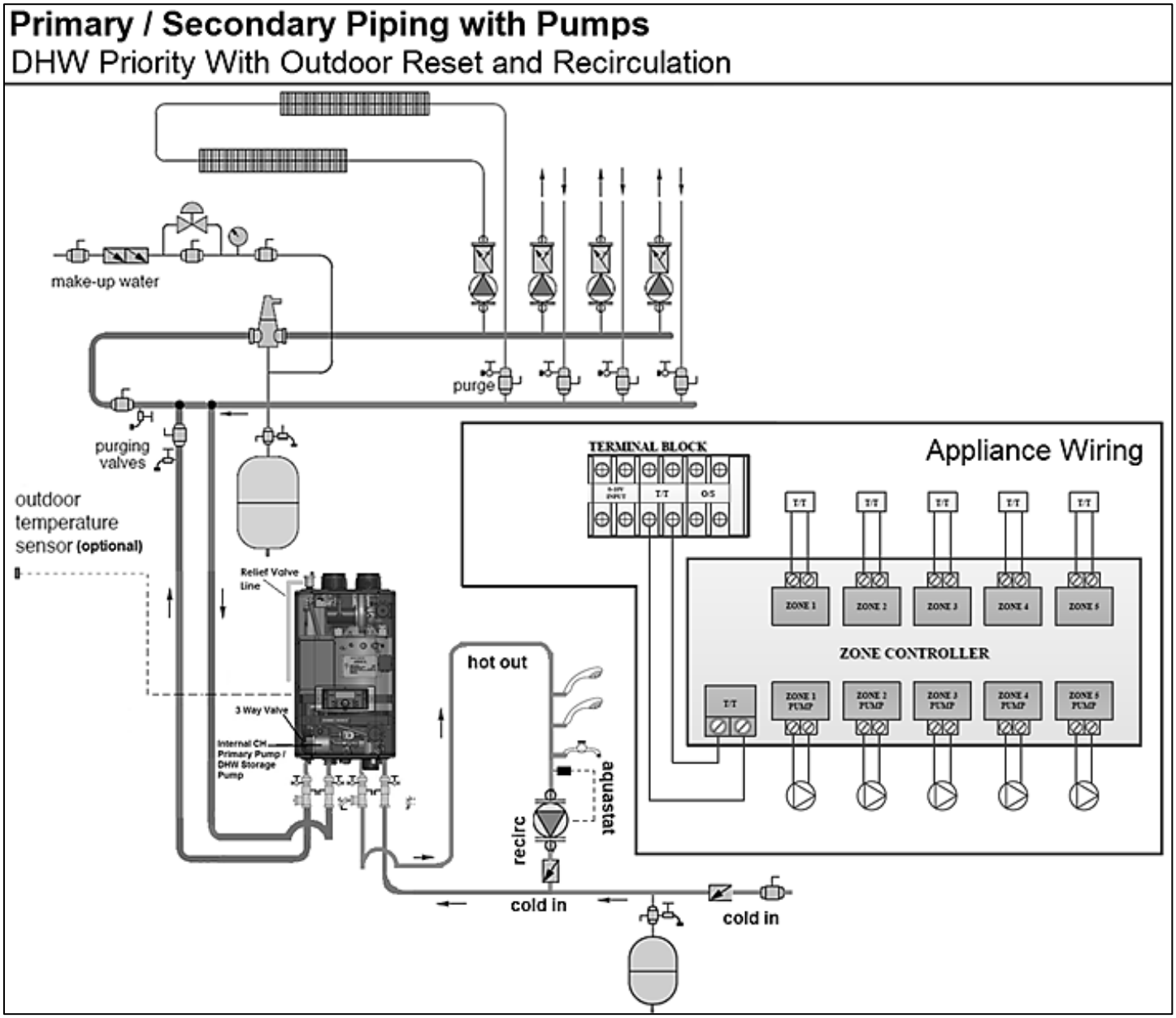

Figure 27 – DHW Priority with Outdoor Reset and Recirculation

NOTES:

1. This drawing is meant to show system piping concept only. Installer is responsible for all equipment and detailing required by local codes.
2. All closely spaced tees shall be within 4 pipe diameters center to center spacing.
3. A minimum of 6 pipe diameters of straight pipe shall be installed upstream and downstream of all closely spaced tees.
4. The **minimum** pipe size of DHW piping should be ¾" diameter and CH piping should be 1" in diameter.
5. Circulators are shown with isolation flanges. The alternative is standard flanges with full port ball valves. Purge valves can be used with circulator flanges as an alternative.
6. Piping shown is Primary/Secondary. System flow (secondary loop) must be greater than the appliance's primary loop flow.
7. Install a minimum of 12 diameters of straight pipe upstream of all circulators.
8. **VERY IMPORTANT** – Minimum flow rates outlined in this manual must be maintained through the heat exchanger to minimize short cycling.
9. Each heating zone of a pump-based system has its own circulator with turns on when a zone thermostat calls for heat.
10. **Unit is equipped with built-in primary pump for the heating loop.** This pump is sized to insure proper flow rate through the appliance heat exchanger and related piping. On long pipe runs, it is recommended to keep the pump at maximum speed (setting 3). DO NOT lower it from the factory default.
11. **NOTE:** DO NOT INSTALL a flow check or a pump with flow check on the return line of the primary loop going to the appliance. This will isolate the appliance from the expansion tank, causing pressure to build up in the unit and the Pressure Relief Valve to discharge.

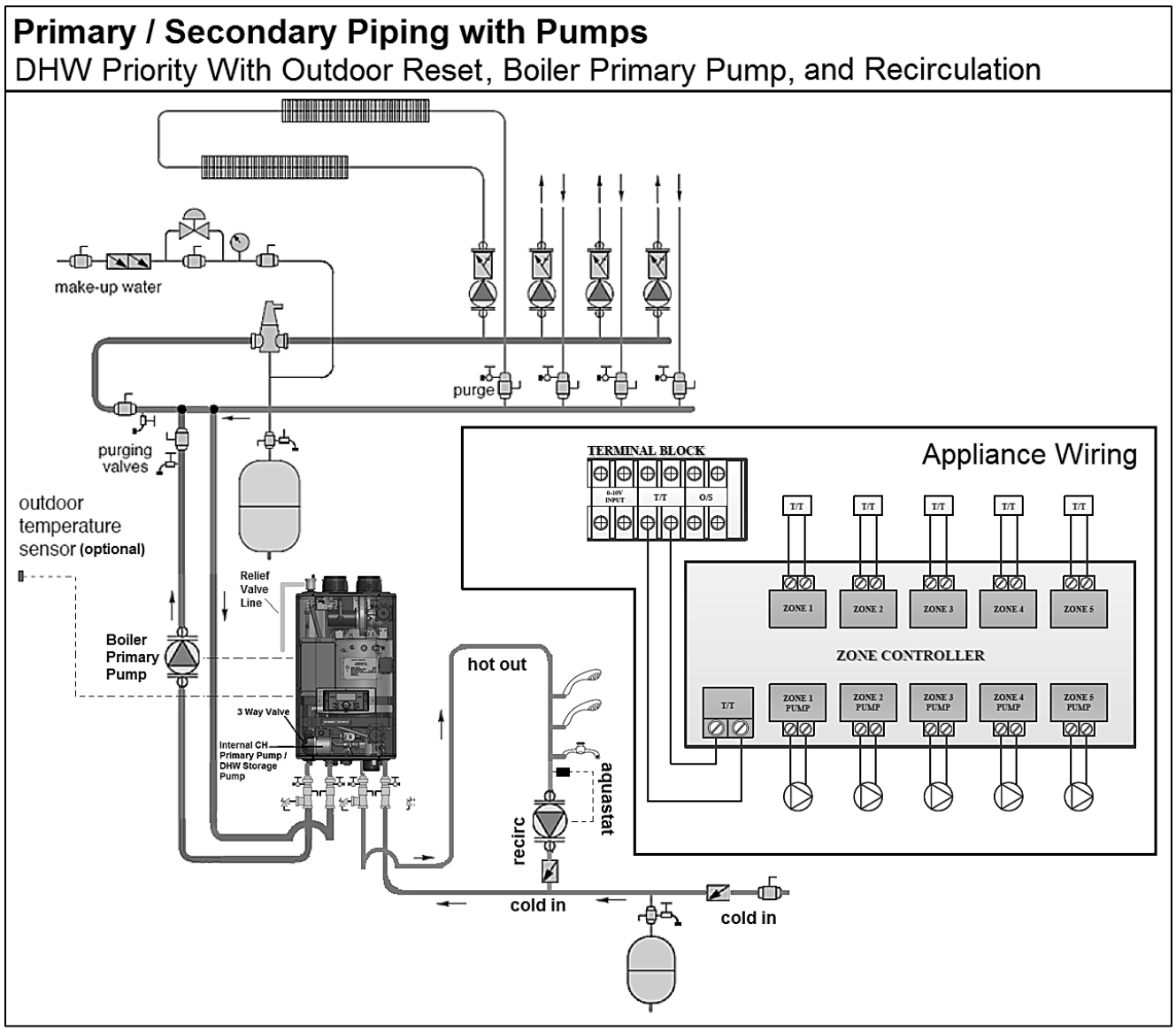

Figure 28 – DHW Priority with Outdoor Reset, Boiler Primary Pump, and Recirculation

NOTES:

1. This drawing is meant to show system piping concept only. Installer is responsible for all equipment and detailing required by local codes.
2. All closely spaced tees shall be within 4 pipe diameters center to center spacing.
3. A minimum of 6 pipe diameters of straight pipe shall be installed upstream and downstream of all closely spaced tees.
4. The **minimum** pipe size of DHW piping should be ¾" diameter and CH piping should be 1" in diameter.
5. Circulators are shown with isolation flanges. The alternative is standard flanges with full port ball valves. Purge valves can be used with circulator flanges as an alternative.
6. Piping shown is Primary/Secondary. System flow (secondary loop) must be greater than the appliance's primary loop flow.
7. Install a minimum of 12 diameters of straight pipe upstream of all circulators.
8. **VERY IMPORTANT** – Minimum flow rates outlined in this manual must be maintained through the heat exchanger to minimize short cycling.
9. Each heating zone of a pump-based system has its own circulator with turns on when a zone thermostat calls for heat.
10. **Unit is equipped with built-in primary pump for the heating loop.** This pump is sized to insure proper flow rate through the appliance heat exchanger and related piping. On long pipe runs, it is recommended to keep the pump at maximum speed (setting 3). DO NOT lower it from the factory default.
11. **NOTE:** DO NOT INSTALL a flow check or a pump with flow check on the return line of the primary loop going to the appliance. This will isolate the appliance from the expansion tank, causing pressure to build up in the unit and the Pressure Relief Valve to discharge.
12. To achieve 199,000 BTU/hr, install a Boiler Primary Pump. **NOTE:** RECOMMENDED PUMP: TACO 0013 or equivalent.

    Boiler Primary Pump Instructions:

    a. Install pump. Connect the pump to boiler terminal (2A max).

    b. Go into installer menu and change 19:cb from 70 (default) to 100.

D. CH AND DHW PRESSURE RELIEF VALVES

An external pressure relief valve must be installed on this appliance for both the CH and DHW loops. When installing, observe the following guidelines. Pressure relief valves must be installed as close to the appliance as possible. No other valves should be placed between the pressure relief valve and the appliance. Failure to comply with these guidelines can result in substantial property damage, personal injury, or death.

This appliance has a high-temperature shut-off switch built in as a standard safety feature. Therefore, a “pressure only” relief valve is required. DO NOT operate this appliance before the supplied pressure relief valve is installed with sufficient relieving capacity in accordance with the ASME rating plate on the appliance.

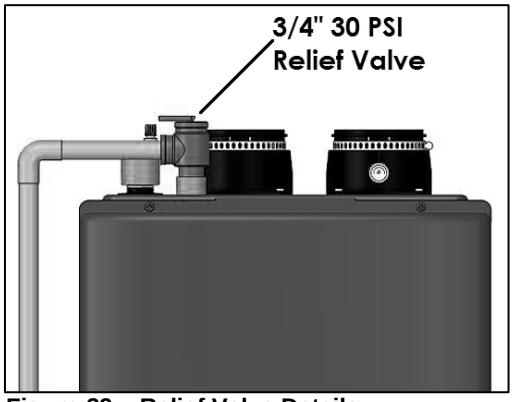

Figure 29 – Relief Valve Details

CH Loop

This appliance is provided with a CH pressure relief valve that complies with the ANSI/ASME Appliance and Pressure Vessel Code, Section IV (Heating Appliances). The included 30 psi CH Pressure Relief Valve must be installed on the CH supply line to ensure a compliant installation and safe operation. HTP has supplied a ¾” X 1” bushing to aid installation of the CH Pressure Relief Valve. The valve is meant to be field installed. DO NOT install a CH pipe line relief valve with a pressure rating greater than 30 psi. This is the maximum allowable CH relief valve setting for this appliance.

DHW Loop

This appliance must be provided with a DHW pressure relief valve that complies with local codes, but not less than valves certified as meeting the requirements of *Relief Valves for Hot Water Supply Systems, ANSI Z21.22 CSA4.4* by a nationally recognized lab that maintains periodic inspection of production listed equipment. A DHW pressure relief valve is not included with the appliance, and is to be field supplied and installed. DO NOT install a DHW relief valve with a pressure rating greater than 150 psi. This is the maximum allowable DHW relief valve setting for this appliance.

After installing the relief valves and filling and pressurizing the system, test the operation of the valves by lifting the levers. Make sure the valves discharge freely. If a valve fails to operate correctly, replace it with a new relief valve. Ensure that the maximum BTU/H rating on the pressure relief valve is equal to or greater than the maximum input BTU/H rating of the combination appliance.

⚠ WARNING

To avoid water damage or scalding due to relief valve operation:

- Discharge line must be connected to relief valve outlet and run to a safe place of disposal. Terminate the discharge line in a manner that will prevent possibility of severe burns or property damage should the relief valve discharge.
- Discharge line must be as short as possible and the same size as the valve discharge connection throughout its entire length.
- Discharge line must pitch downward from the valve and terminate at least 6” above the floor drain, making discharge clearly visible.
- The relief line cannot be in contact with any live electrical parts.
- Discharge line shall terminate plain, not threaded, with a material serviceable for temperatures of 375ºF or greater.
- Do not pipe discharge to any location where freezing could occur.
- No shutoff valve may be installed between the relief valve and appliance or in the discharge line. Do not plug or place any obstruction in the discharge line.
- Test the operation of the relief valve after filling and pressurizing the system by lifting the lever. Make sure the valve discharges freely. If the valve fails to operate correctly, replace it with a new relief valve.
- Test relief valve at least once annually to ensure the waterway is clear. If valve does not operate, turn the appliance “off” **and call a plumber immediately.**
- Take care whenever operating relief valve to avoid scalding injury or property damage.
- For appliances installed with only a pressure relief valve, the separate storage vessel must have a temperature and pressure relief valve installed. This relief valve shall comply with *Relief Valves for Hot Water Supply Systems, ANSI Z21.22 CSA4.4.*

FAILURE TO COMPLY WITH THE ABOVE GUIDELINES COULD RESULT IN FAILURE OF RELIEF VALVE OPERATION, RESULTING IN POSSIBILITY OF SUBSTANTIAL PROPERTY DAMAGE, SEVERE PERSONAL INJURY, OR DEATH.

PART 9 – CONNECT ELECTRICAL POWER / INITIAL STARTUP

⚠ WARNING

Install wiring and electrically ground appliance in accordance with the authority having jurisdiction or, in the absence of such an authority, follow the National Electrical Code, NFPA 70, and/or CSA C22.1 Electrical Code-Part 1 in Canada. Failure to follow all applicable local, state, and national regulations, mandates, and building supply codes for guidelines to install the electrical power supply could result in property damage, serious personal injury, or death.

⚠ WARNING

ELECTRICAL SHOCK HAZARD – To ensure safety, turn off electrical power supply at service entrance panel before making any electrical connections to avoid possible electric shock hazard. Failure to do so could result in property damage, serious personal injury, or death.

A. GENERAL OPERATING CONDITIONS

- Temperature
  - Operating Ambient Temperature Range: 14 – 140ºF (-10 to 60ºC)
  - Operating Relative Humidity: Up to 90% at 104ºF (40ºC)

B. WIRING INFORMATION

1. This appliance must be properly grounded. Ensure the electrical outlet (120V / 15 Amp minimum) that the appliance will be plugged into is properly grounded.

⚠ WARNING

This appliance is equipped with a three prong plug. It should only be plugged directly into a properly grounded three prong receptacle. DO NOT remove the ground plug from the plug. Doing so could result in property damage, serious personal injury, or death.

2. The wiring diagrams contained in this manual are to be used for reference purposes only.

3. Refer to these diagrams and the wiring diagrams of any external controls used with the installation when wiring the appliance. Read, understand, and follow all wiring instructions supplied with the controls.

4. Do not disconnect the power supply when the appliance is in normal operation.

NOTE: For additional electrical protection, the use of a surge protector is recommended. Damage caused by power surges is not covered by the warranty.

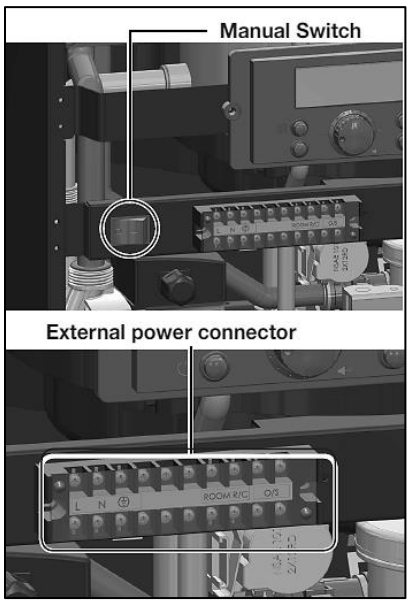

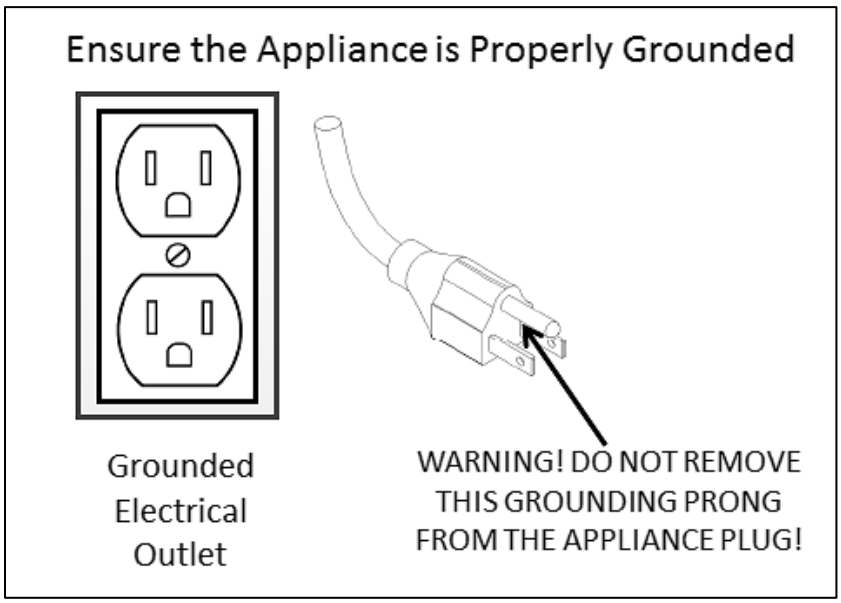

Figure 30 – Manual Power Switch and Appliance Plug Details

NOTICE
If the appliance display does not come ON, first check the plug. Then check the electrical panel circuit breaker and reset it if necessary. If the circuit breaker trips again, do not reset. Disconnect the plug and have a qualified technician diagnose the problem.

C. DIP SWITCHES

There is one set of DIP switches. The appliance is default set at the factory to operate on Natural Gas with a 3” vent.

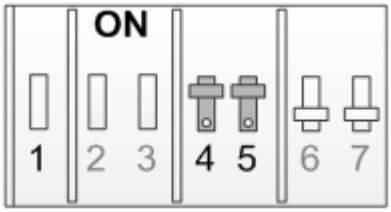

Figure 31 – Dip Switch Detail

DIP SWITCH GROUP

DIP SWITCH		OFF	ON
1 – 3	DO NOT MOVE	DO NOT MOVE	
4	Vent Size	2”	3”
5	Gas Type	LP	NG
6	High Fire	Normal Operation	High Fire
7	Low Fire	Normal Operation	Low Fire

Table 17 – DIP Switch Group

SYSTEM CONTROL SETTINGS

MAXIMUM FLAME DETECTING VOLTAGE	2.5V
PRE-PURGE TIME (Tp)	5 seconds
SAFETY TIME (IGNITING TIME) (Ts)	3.5 seconds
IGNITING INTERVAL TIME	10 seconds
POST-PURGE TIME (Tip)	2 minutes (1st: 1 minute, 2nd: 1 minute)
OVER-HEATING 1,2,3 PROTECTION DETECTION TIME	<3 seconds
PUMP 1 POST CIRCULATING TIME (T1pv)	1 minute
PUMP 2 POST CIRCULATING TIME (T2pv)	1 minute
HIGH AND LOW WATER LEVEL DETECTION TIME	<6 seconds
HIGH AND LOW WATER LEVEL RECOVERY TIME	<6 seconds

Table 18 – System Control Settings

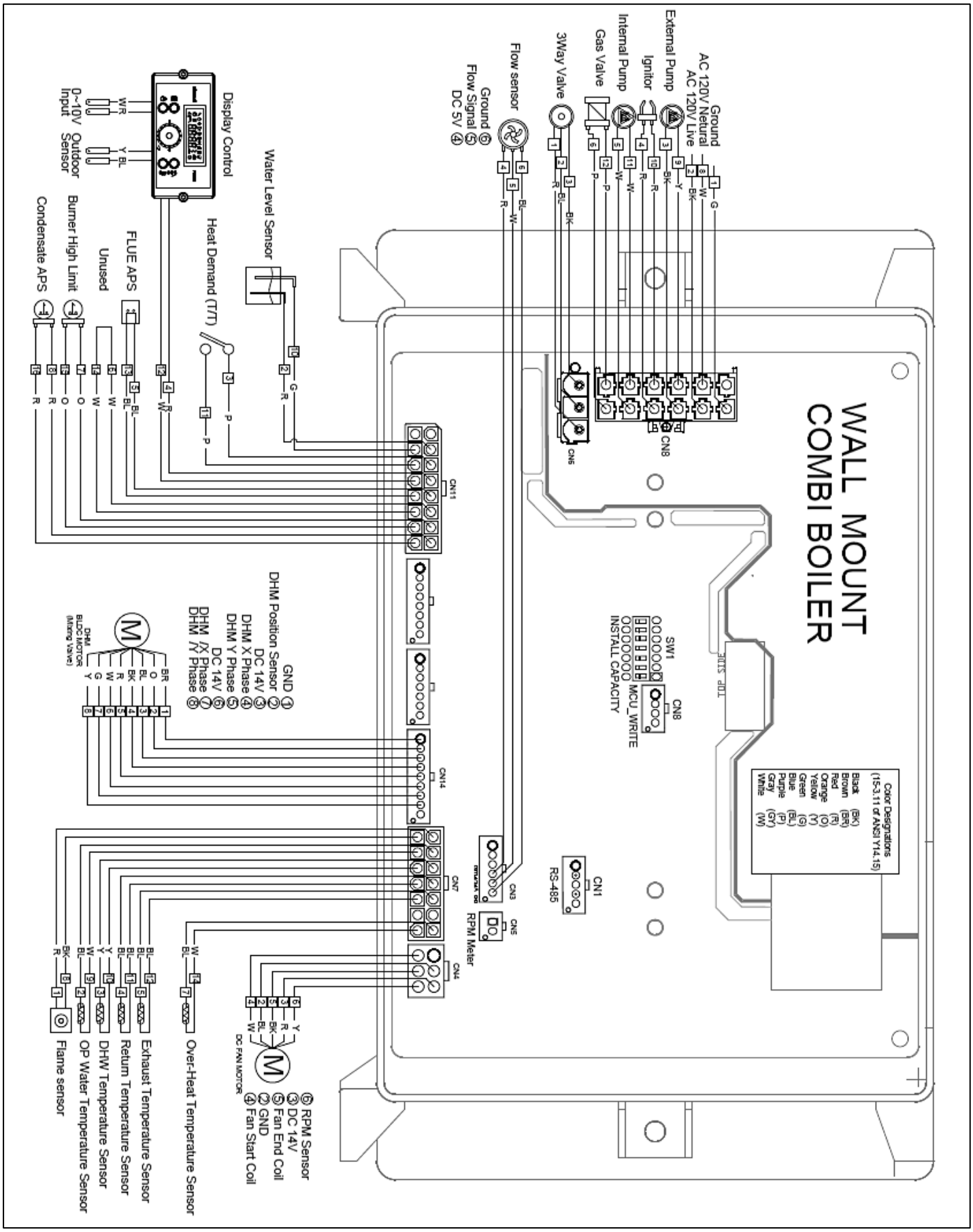

Figure 32 – Electrical Wiring Diagram

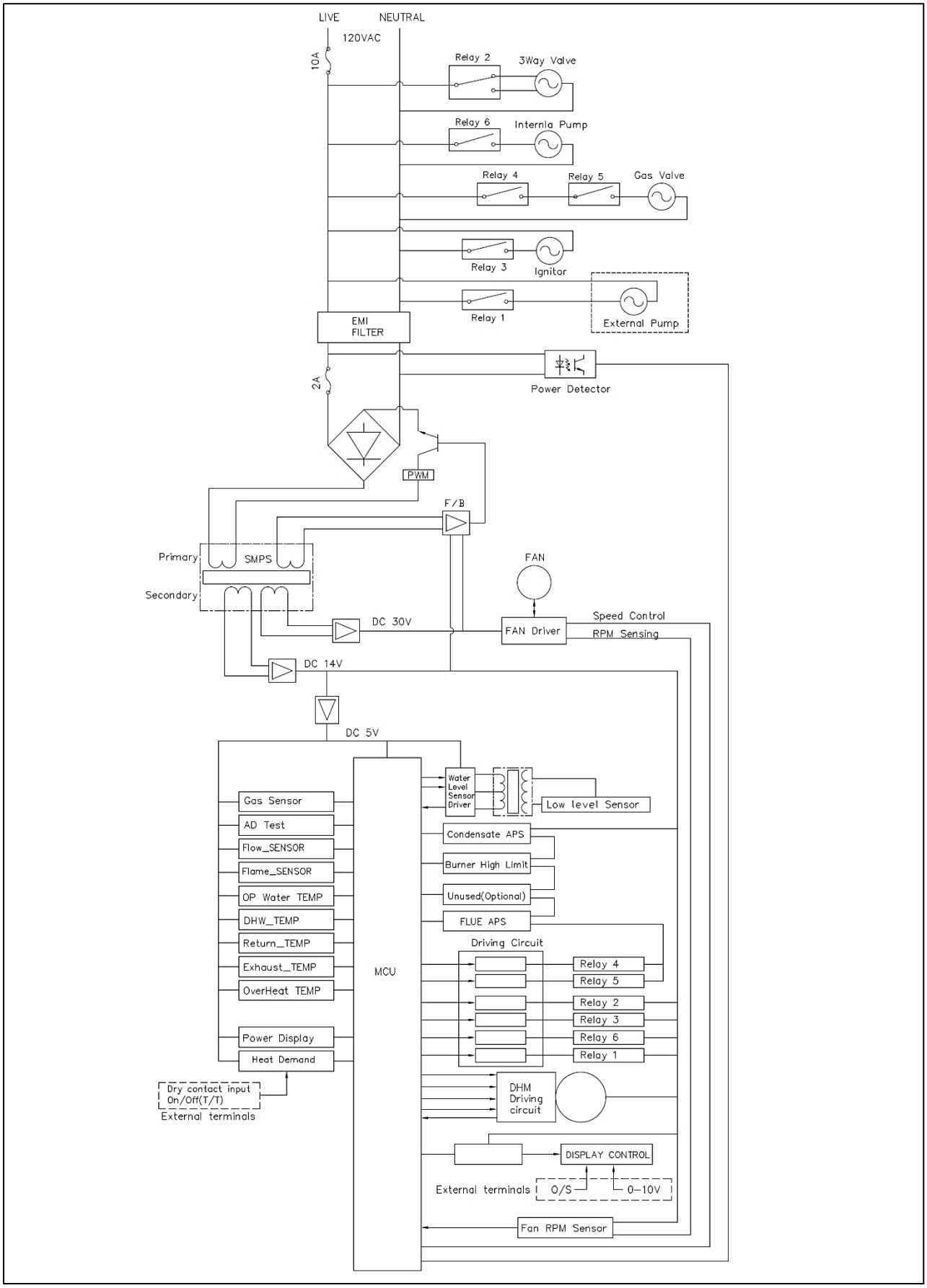

Figure 33 – Ladder Diagram

CONNECTOR			DESCRIPTION	HT SELV
NO. OF LOCATION	PIN	BOARD SILK		
CN9 65001WS-12	1	-	GROUND	HT (120V~) AC
	2	L	Power Supply Line	
	3	CP1	External CH Pump	
	4	IT	Ignitor	
	5	L(HT)	Internal Pump	
	6	GV	Gas Valve	
	7	-	-	
	8	N	Power Supply Neutral	
	9-12	N	AC Power COM Line	
CN6 LW6A4-03	1	CP2/3WAY	3 Way Valve	
	3			
CN1 SMW250-03	1	RS-485	RS485 +	SELV (5V) DC
	2		GND	-
	3		RS485 -	SELV (5V) DC
CN4 LWD1140-06	1	FAN	NOT USED	-
	2		GND	SELV (14V) DC
	3		VDD	SELV (14V) DC
	4		Fan power (start coil)	SELV (8~26.5V) AC
	5		Fan power (end coil)	
	6		Fan speed feedback signal	SELV (14V) DC
CN8 SMW250-04	1	MCU ISP	GND	SELV (5V) DC
	2		ISP / Reset Port	
	3		ISP TOOL0 Data Port	
	4		VCC	
CN11 LWD1140-16	1	HWL	NOT USED	SELV (12V~) AC
	8			
	2	LWL	Low Water Level Leakage Sensor	
	10			
	3	HD	Central Heating Demand	SELV (5V) DC
	11			
	4	TH	Connect to the Display Control (Thermostat)	SELV (14V) DC
	12			
	5	APS	Air Pressure Switch	
	13			
	6	EL	NOT USED	
	14			
	7	BL	Burner Limit	
	15			
	8	HL	Condensate Block	
	16			

Table 19 – Appliance Wiring 1

CONNECTOR			DESCRIPTION	HT SELV
NO. OF LOCATION	PIN	BOARD SILK		
CN7 LWD1140-14	1	F.S	Flame Detect Sensor	SELV (5V)
	8			
	2	OP.S	Operating Water Temperature Sensor	
	9			
	3	DH.S	DHW Temperature Sensor	
	10			
	4	I.S	NOT USED	
	11			
	5	BG.S	Exhaust Temperature Sensor	
	12			
	6	ST.S	NOT USED	
	13			
	7	SP.S	Over-Heat Temperature Sensor	
	14			
CN14 SMW250-09	1	DHM	GND	SELV (14V)
	2		DHM Stepper Motor Position	
	3		VDD	
	4		DHM Stepper Motor Coil X Phase	
	5		DHM Stepper Motor Coil Y Phase	
	6		VDD	
	7		DHM Stepper Motor Coil / X Phase	
	8		DHM Power IWM Stepper Motor Coil / Y Phase	
	9		NOT USED	-
CN3 SMW250-06	4	FLUX1	VCC	SELV (5V)
	5		Water Flow Sensor	
	6		GND	
CN5 SMW250-10	1	RPM	Fan RPM Check	
	2		GND	

Table 20 – Appliance Wiring 2

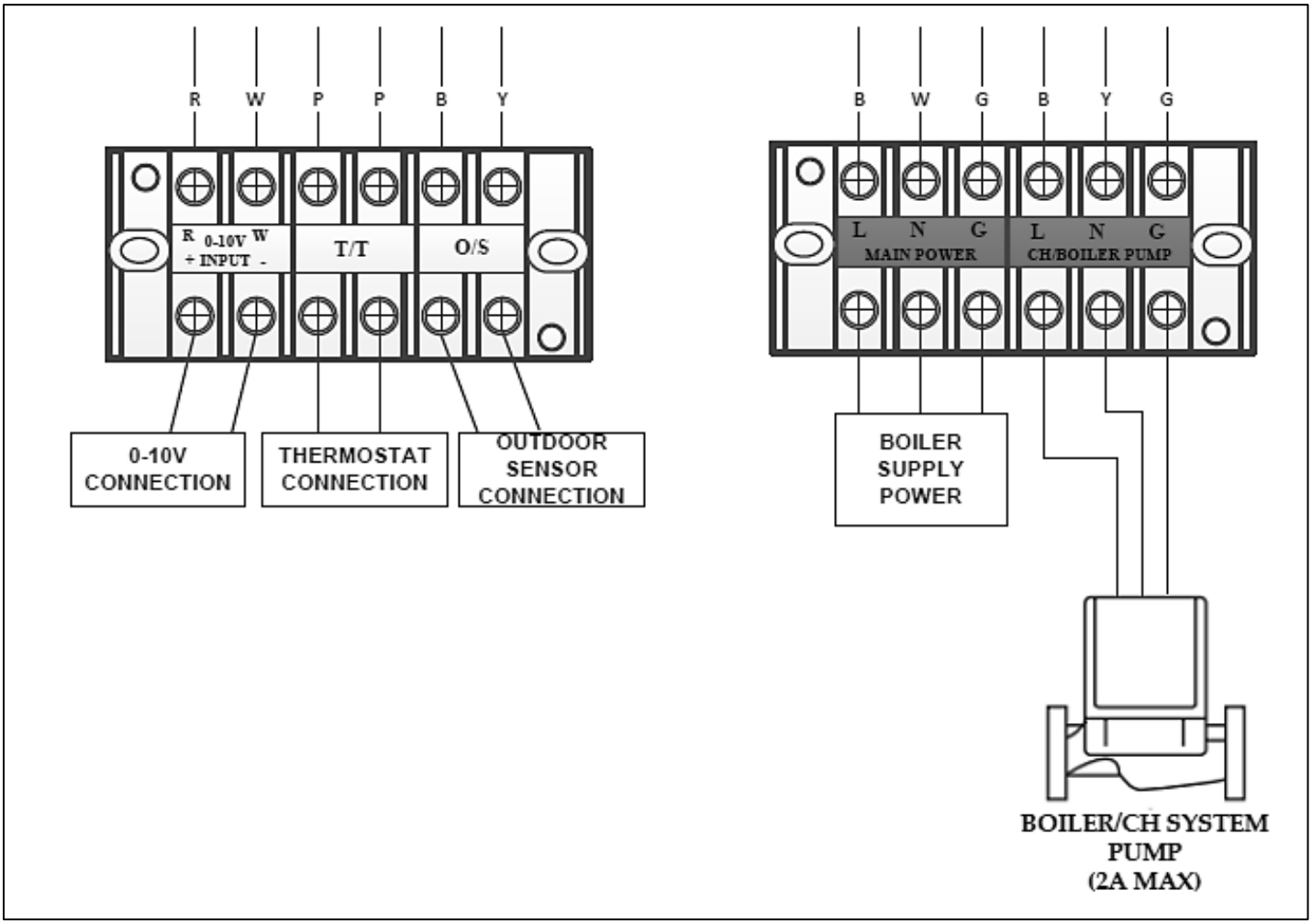

Figure 34 – Terminal Block Wiring Detail

PART 10 – OPERATING SYSTEM INSTRUCTIONS

A. CONTROL PANEL

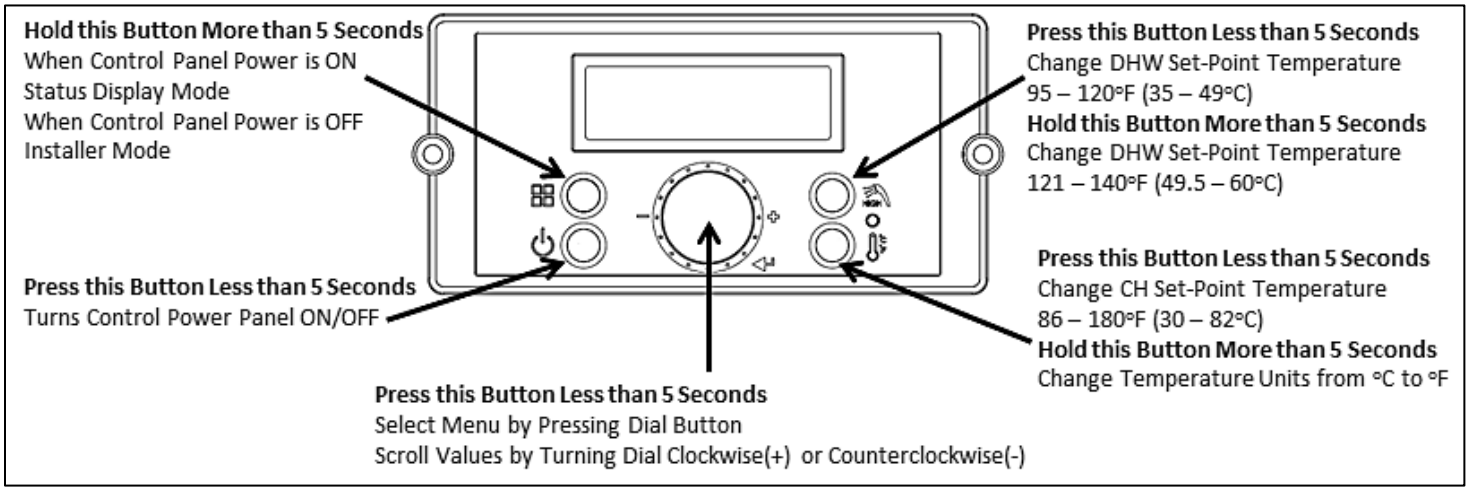

Figure 35 – Appliance Control Panel Detail

B. LCD DISPLAY DESCRIPTIONS

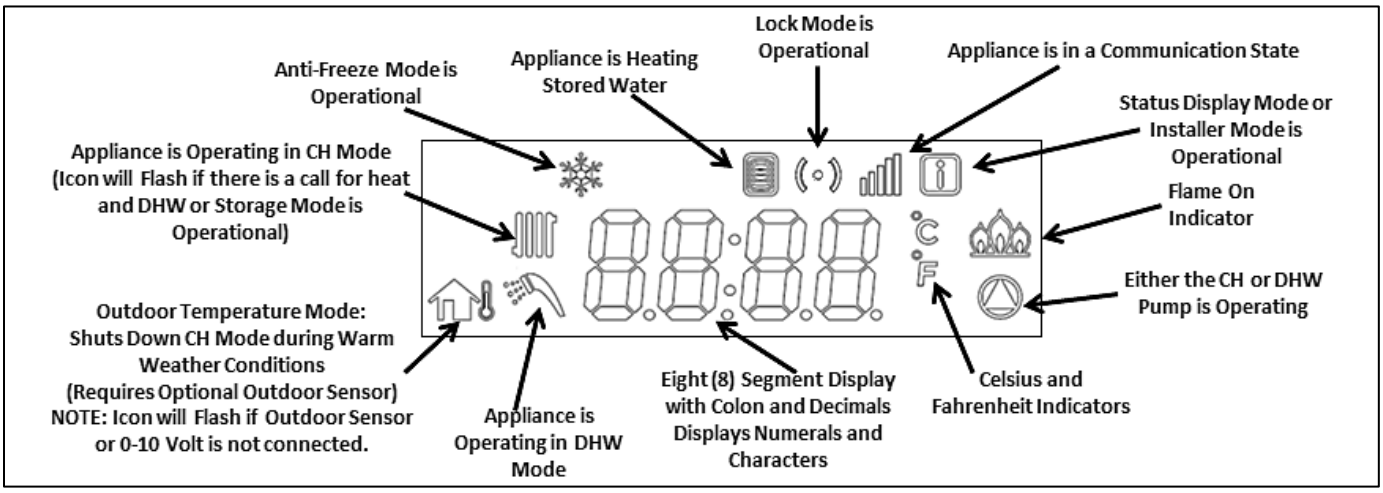

Figure 36 – LCD Display Detail

LCD also features a backlit lamp that will illuminate:

- When a user action is detected (a button is pressed)
- The display has timed out for approximately 2 minutes

C. START-UP SEQUENCE

After the appliance is powered ON, the LCD display shows a sequence of information. The icons will flash, followed by various indicators that describe the appliance controller and software versions. It will take the appliance roughly 15 seconds to cycle through the Start-Up Sequence.

NOTE: When the appliance is powered ON, the fan will operate at maximum speed for 1 minute to purge the air and any fumes from the intake and exhaust pipes.

Display Items	Time for Display	Remarks
LCD Test	1 Sec	All segments “ON”
	0.5 Sec	All segments “OFF”
Category: 140W / 199W	1 Sec	Pdn
	1 Sec	0051
Software Version for Front Panel	1 Sec	SPn
	1 Sec	00.XX
Software Version for Appliance	1 Sec	SFn
	1 Sec	XX.XX
Hardware Version for Appliance	1 Sec	Hdn
	1 Sec	00XX

Table 21 – Start-Up Sequence

After start-up, the display appears as follows.

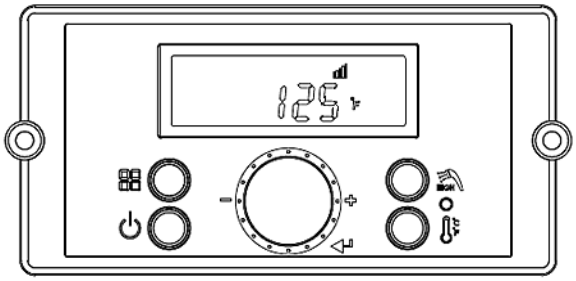

Figure 37 – Initial Display Screen Example

NOTE: The initial display screen will differ depending on a number of factors, including whether the appliance detects a call for heat or hot water.

The Control System can operate through user and service modes that have specific LCD outputs and dedicated controls, including:

- Changing the Set-Point Temperature

- Lock Mode
- Error Mode
- Status Display Mode
- Outdoor Temperature Mode
- Installer Mode

D. CHANGING THE DHW SET-POINT

The display shows the icon when the DHW set-point can be changed.

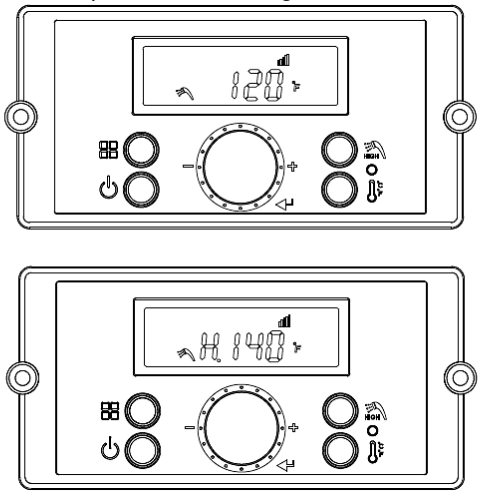

Figure 38 – DHW Set-Point Screens

Press the button when the display panel is powered ON to change the DHW Set-Point. The DHW icon and current set-point will display and flash. This indicates that the DHW Set-Point can be changed. Factory DHW Set-Point is 125ºF (51ºC). Initial DHW Set-Point range is 95 – 120ºF (35 – 49ºC).

Turn the dial counterclockwise to lower and clockwise to raise the DHW set-point. After changing the temperature, press the button to save the set-point.

To change the DHW Set-Point above 121ºF (49.5ºC), press the button when the display panel is powered ON. The current DHW set-point will display. The DHW icon will flash. Then press and hold the button for five seconds. The scald warning letter “H” (high temperature) will display. High temperature DHW Set-Point range is 121 – 140ºF (49.5 – 60ºC).

Turn the dial counterclockwise to lower and clockwise to raise the DHW set-point. After changing the temperature, press the button to save the set-point.

⚠ DANGER

Hotter water increases the risk of scald injury. Scalding may occur within 5 seconds at a setting of 140ºF (60ºC). Water temperature over 125ºF can instantly cause severe burns, or death, from scalds. Children, disabled, and elderly are at the highest risk of being scalded. See instruction manual before setting temperature at appliance. Feel water before bathing or showering!

E. CHANGING THE TEMPERATURE INDICATOR

To change the temperature indicator from Fahrenheit to Celsius, press and hold the button for more than five seconds when the display panel is powered ON. This will toggle the temperature unit indicated on the display.

F. CHANGING THE CH SET-POINT

Press the button when the display panel is powered ON. The display will appear as follows. The set-point will flash when the CH Set-Point can be changed.

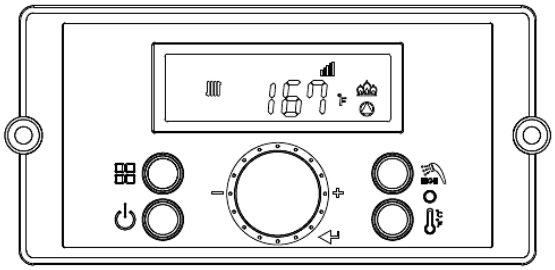

Figure 39 – CH Set-Point Screen

Factory CH Set-Point is 180ºF (82ºC). CH Set-Point range is 86 – 180ºF (30 – 82ºC).

Turn the dial counterclockwise to lower and clockwise to raise the current CH set-point. After changing the temperature, press the button to save the setting.

NOTE: The CH Set-Point cannot be changed by pressing the button if an outdoor sensor or 0-10V is connected to the appliance. When using an outdoor sensor, the appliance will automatically change the target temperature based on the outdoor reset curve. When using 0-10V, the appliance will automatically change the target temperature based on input voltage.

NOTE: If input voltage is less than 1.5V the 0-10V will be ignored.

G. STORAGE MODE

Storage Mode indicates that the appliance is heating stored water in the internal storage tank. When Storage Mode is operating the display appears as follows.

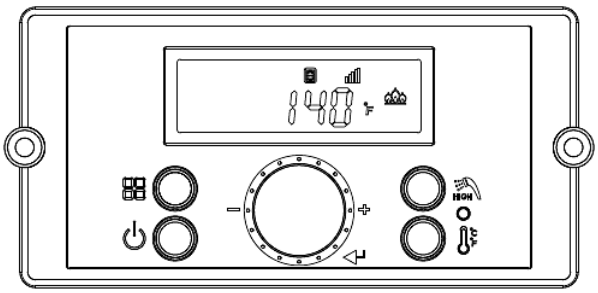

Figure 40 – Storage Mode Screen

H. STATUS DISPLAY MODE

Status Display Mode will activate when the button is pressed and held for five seconds when the display panel is powered ON.

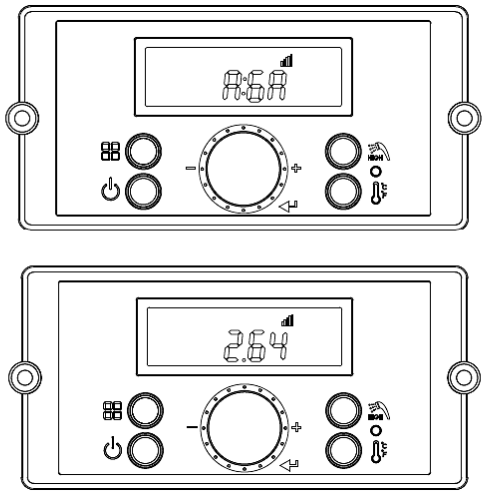

Figure 41 – Status Mode Screens

Turn the dial counterclockwise and clockwise to scroll through the displayed parameters. To view parameter details, press the button at the appropriate screen. Press the or buttons to leave the parameter.

Press the button again to return to Operation Mode.

To turn on Lock Mode, press the button at the d:Lc parameter. Turn the dial counterclockwise or clockwise to scroll On or Off. Press the button to save the selection and return to the parameters.

Press the button again to return to Operation Mode.

NOTE: The Control System will not allow the changes if Lock Mode is activated. Lock Mode will have to be turned off before making further changes.

Parameter		Detail		Description		
O: ot		Outdoor temperature		Current outdoor sensor temperature		
A: Li or A: GA		DHW Water flow rate		Current flow (Li: LPM, GA: GPM)		
b: It		CH return water temperature		Current CH return water temperature		
C: Fr		FAN speed (RPM)		Current fan speed (RPM)		
d: Lc		Lock function (Lock)		Lock Mode “ON”/”OFF”		
E: oP		CH supply temperature (Operating temperature)		Current CH supply temperature		
F: dH		DHW outlet temperature		Current DHW outlet temperature		
H: Eh		Exhaust temperature		Current exhaust temperature		
I: St		N/A		Not Used (Default is 0)		
J: oH		CH water overheat temperature		Current temperature on the overheating sensor.		
L: rt	**1: PH**	Burner Operation Time	Supply power time	**L:rt** display on sub menu	Unit : 100 hour	
	2: rh		Burner operation time		Unit : 1 hour	
	3: rH		Burner operation time		Unit : 1,000 hour	
	4: It		Ignition cycles		Cycle : 10 times	
	5: IH		Ignition cycles		Cycle : 10,000 times	
P: Ou		Displays output condition for internal primary pump and three way valve.		1st Icon	2nd Icon	3rd Icon
				External Pump	Internal Primary Pump	3 Way Valve
		- Off				
		- On				

Table 22 – Status Mode Display Screen Descriptions

I. INSTALLER MODE

Installer Mode will activate when the button is pressed and held for five seconds while the display is powered OFF. If the display is powered on, press the button to turn it off before pressing and holding the button for five seconds.

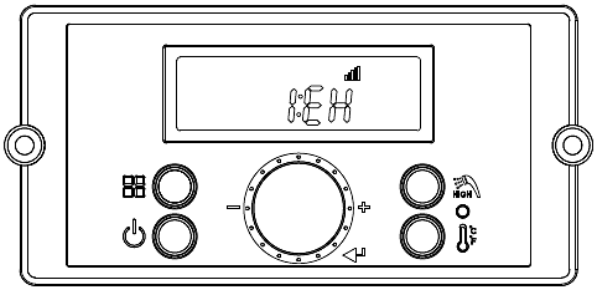

Figure 42 – Installer Mode Screens

Toggle through items that can be viewed/changed by turning the dial. To view/change an item, press the button. Some displayed items can be changed by turning the dial counterclockwise to lower and clockwise to raise the displayed value. Press the button again to save settings.

To leave Installer Mode, press the button again. The display will return to power off mode.

Display	Default	Detail	Description
1: EH	E0:00	Error history up to 10	Check last 10 error codes (E0 - E9)
2: cE	OFF	Delete Error history	Select “ON” to delete error code history Range: ON or OFF

3: In	OFF	Initialized system	Select “ON” to reset to factory setting (Burner operation time, Ignition cycles, and Supply power time will not be reset) Range: ON or OFF
4: Fu	GA	Change unit for water volume	Range: GA or Li
5: St	ON	Stored water heating function “ON”, “OFF”	Select “OFF” to turn off this function Range: ON or OFF
6: OH	68 F	Maximum Outdoor Temperature	When used with an outdoor sensor, sets the maximum outdoor design temperature for the system design. Maximum outdoor temperature must be set 9ºF above the minimum outdoor temperature. Range: (Minimum Outdoor Temperature + 9ºF) to 110ºF
7: OL	5 F	Minimum Outdoor Temperature	Sets the minimum outdoor design temperature for the system. Minimum outdoor temperature must be set 9ºF below the maximum outdoor temperature. Range: -4ºF to (Maximum Outdoor Temperature - 9ºF)
8: FH	00	Maximum Fan speed	Adjusts Maximum Fan Speed Range: -30 - +30
9: FL	00	Minimum Fan speed	Adjusts Minimum Fan Speed Range: -30 -+30
10: dr	NO	Initialized burner operation time	Select ON to Initialize burner operation time Range: NO or YES
11: dI	NO	Initialized ignition cycle	Select ON to Initialize ignition cycles Range: NO or YES
12: bt	0	Boost Function	This function boosts CH temperature to the maximum if set point is not reached within the set period of time. Range: 0 - 120 min
13: Ft	1	CH Anti-Frequency time	This function delays burner operation during CH mode Range: 0 - 20 min
14: bo	27 F	Set differential temperature to turn burner “ON”	When set, the appliance will operate to heat CH water when water temperature falls below a differential setting. Example: If setpoint is 180ºF and differential is 27ºF, the appliance will turn on when CH water temperature falls below 153ºF. Range: 9 - 27ºF
15: OF	68 F	Warm Weather Shutdown	Warm weather shut down will shut down CH Mode if the programmed outdoor temperature is exceeded. Range: 50 - 110ºF
16: cH	180 F	Maximum supply temperature	Sets the maximum design supply temperature based on the minimum outdoor design temperature. Maximum supply temperature must be set 9ºF above the minimum supply temperature. Range: (Minimum Supply Temperature + 9ºF) - 180ºF
17: cL	86 F	Minimum supply temperature	Sets the design supply water temperature based on the maximum outdoor design temperature. Minimum supply temperature must be set 9ºF below the maximum supply temperature. Range: 86ºF to (Maximum Supply Temperature - 9ºF)
18: dH	140 F	Maximum DHW set temperature	Sets Maximum DHW Setpoint temperature Range:120 - 140ºF
19: cb	100	Heating capacity	Set Heating combustion rate Range: 50 - 100% **NOTE:** 199W Models shall be factory set at 70%. The default number will be 70. This percentage can be increased with an additional pump.
20: db	100	DHW capacity	Set DHW combustion rate Range: 50 - 100%
21: PP	40	Internal CH Pump Post Run Timer, T/T Calling for Heat	When appliance CH setpoint is satisfied, but T/T is calling for heat, the burner will shut OFF and the CH pump will continue to run for this set amount of time Range: 1 ~ 60 minutes
22: Po	5	Internal CH Pump Overrun Timer (On)	This function runs the Internal CH Pump after the Internal CH Pump Post Run Timer has completed. This will cycle the Internal CH Pump again based on the default programmed Off and On cycles and repeats until the central heating call is satisfied. Range: 1~60 minutes
23: PF	0	Internal CH Pump Overrun Timer (Off)	
24: SF	158 F	Internal DHW Storage Tank Setpoint	Sets the Internal DHW Storage Tank Setpoint Range:140 ~ 167ºF
25: So	27 F	Internal DHW Storage Tank Differential	Sets the Internal DHW Storage Tank Differential Range: 9 ~ 36ºF

26: dt	2	Delay time when switching from DHW mode to CH mode		Range: 0 – 2 minutes
Display	**Default**	**Detail**		**Description**
27:PE	1	Internal CH Pump Post-Purge Time, T/T Satisfied		Allows the user to set the appliance pump post purge time once the appliance CH setpoint and thermostat are satisfied. Range: 1-5 minutes
28: HA	HA 0	N/A		N/A
29: AP	**AP: cP**	5	Internal CH Pump and Internal DHW Storage Pump Test Mode	This function sets the time to run both the Internal CH and Internal DHW Storage pumps to purge air from the system. Range: 1 – 30 minutes
	cP: off or cP: on	OFF	Internal CH Pump and Internal DHW Storage Pump Test Mode	Turn this function on to activate Internal CH and Internal DHW Storage pump testing. Only works in installation mode. Turns off when in normal mode.

Table 23 – Installer Mode Descriptions

J. ERROR MODE

The following screen will display when the appliance encounters an error.

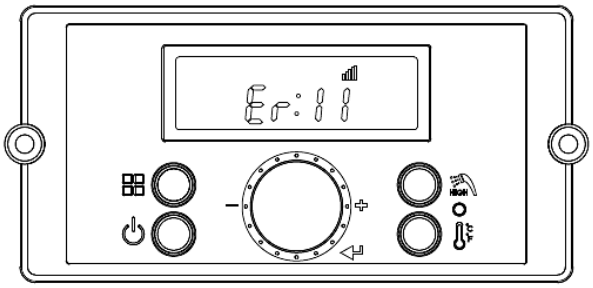

Figure 43 – Error Mode Screen

Error Code	Error Code Description	Possible Remedies
Er:10	Flame has Extinguished 5 (Five) Times	Press the Power button to clear the Error Code. If Error happens again: 1. Monitor the gas pressure to the appliance while in operation. Ensure pressure is between 3.5 and 14” WC. 2. Check gas valve wire. Ensure connection is secure. 3. Check flame detection sensor. Ensure connections are secure. Normal operating settings are more than 2.5DC before ignition, less than 2.5DC after ignition. 4. Check vent terminations. Ensure there are no blockages. 5. Assure that the flame is stable when lit. 6. If the problem persists, replace the main control.
Er:11	Ignition has Failed 5 (Five) Times	Press the Power button to clear the Error Code. If Error happens again: 1. Monitor the gas pressure to the appliance while in operation. Ensure pressure is between 3.5 and 14” WC. 2. Check gas valve wire. Ensure connection is secure. 3. Check flame detection sensor. Ensure connections are secure. Normal operating settings are more than 2.5DC before ignition, less than 2.5DC after ignition. 4. Check igniter transformer for proper connection. 5. Clean the spark igniter with steel wool to remove oxides. Ensure proper separation (3-4 mm). 6. Replace the spark igniter if damaged. 7. Assure that the flame is stable when lit. 8. If the problem persists, replace the main control.
Er:16	Operating Temperature Sensor detects Water Temperature Greater than 203ºF (95ºC)	Press the Power button to clear the Error Code. If Error happens again: 1. Check if dip switch High Fire setting is ON. Switches 6 and 7 should be OFF for normal operation. 2. Check if CH inlet pipe is blocked. Ensure there is enough water flowing to the appliance. 3. Check Operating Temperature sensor at CH heat exchanger outlet. If resistance is zero, replace the sensor. 4. If the problem persists, replace the main control.
Er:20	Condensate APS – Closed is Normal, Open is Fault (Condensate Drain Trap)	Press the Power button to clear the Error Code. 1. Check Condensate and main controller connections. Ensure all are secure. 2. Check Condensate sensor resistance. If resistance is not zero, replace the switch. 3. Check Condensate hose. Ensure it is connected and in good condition. 4. Check condensate line and termination for blockages. 5. Check exhaust vent for blockages. 6. If the problem persists, replace the main control.

Er:28	Overheat Sensor Open or Short	This Error Code will go away when CH temperature decreases. If Error happens again: 1. Check overheat temperature sensor. Ensure connections are secure. 2. Check overheat sensor resistance. If resistance is zero, replace the sensor. 3. If the problem persists, replace the main control.
Er:29	Flue APS Open - Closed is Normal, Open is Fault (Intake / Exhaust)	1. Check APS and connections. 2. If APS is open, replace the switch. 3. If APS is closed and connections are secure, check switch resistance. If resistance is not zero, replace the switch. 4. Check condensate line and termination for blockages. 5. Check exhaust vent for blockages. 6. Press the Power button to clear the Error Code and restart appliance. 7. If the problem persists, replace the main control.
Er:32	DHW Sensor Open or Short	This Error Code will go away when outlet DHW temperature decreases. If Error happens again: 1. Check DHW outlet temperature sensor. Ensure connections are secure. 2. Check sensor resistance. If resistance is zero, replace the sensor. 3. If the problem persists, replace the main control.
Er:33	CH Temperature Sensor Open or Short	This Error Code will go away when CH temperature decreases. If Error happens again: 1. Check CH temperature sensor. Ensure connections are secure. 2. Check CH sensor resistance. If resistance is zero, replace the sensor. 3. If the problem persists, replace the main control.
Er:35	Exhaust Sensor Open or Short	This Error Code will go away when exhaust temperature decreases. If Error happens again: 1. Check exhaust temperature sensor. Ensure connections are secure. 2. Check sensor resistance. If resistance is zero, replace the sensor. 3. Check exhaust vent for blockage. 4. If the problem persists, replace the main control.
Er:36	Abnormal Supply Voltage	Supply voltage is too low to operate. This Error Code will go away when supply voltage returns to normal operating range. If Error happens again: 1. Ensure appliance is properly wired to a power source meeting the requirements on the rating plate. 2. If problem persists, replace the main control.
Er:37	Abnormal Supply Frequency	Supply frequency is too high to operate. This Error Code will go away when supply frequency returns to normal operating range. If Error happens again: 1. Ensure appliance is properly wired to a power source meeting the requirements on the rating plate. 2. If problem persists, replace the main control.
Er:38	Error Appears When Control Stores Data, but Data is not Saved	Press the Power button to clear the Error Code. Replace the main control.
Er:41	Fan Speed too High with Flame On	Press the Power button to clear the Error Code. If Error happens again: 1. Check the vent connections for blockages. 2. Check the burner assembly. 3. Check fan operation. If fan appears to be operating normally but RPMs are too high, replace the fan. 4. If the problem persists, replace the main control.
Er:42	Jumped Wire Disconnected	Press the Power button to clear the Error Code. If Error happens again: 1. Ensure the jumped wire is properly connected. 2. If the problem persists, replace the main control.
Er:43	Burner Overheat Switch Open	Press the Power button to clear the Error Code. If Error happens again: 1. Check burner overheat switch connections. Ensure connections are secure. 2. Check switch resistance. If resistance is not zero, replace the switch. 3. If the problem persists, replace the main control.
Er:61	Fan Speed Feedback Signal Abnormal	This Error Code will go away when the condition is remedied. If Error happens again: 1. Check the connections to the fan. Ensure all are secure. 2. If the fan does not rotate during the ignition sequence, check for AC8V~26.5V power at the fan connection. If AC8V~26.5V power is present at the control, replace the fan. If the blower does not have AC8V~26.5V power, check power at the control. If AC8V~26.5V power is not present at the control, replace the control. 3. If the problem persists, replace the main control.

Error Code	Error Code Description	Possible Remedies
Er:66	Mixing Valve Initial Value Error (Mixing Valve Cannot Return to Initial Position)	This Error Code will go away when the condition is remedied. If Error happens again: 1. Turn power OFF and ON at the main power switch internal to the appliance. 2. Check wiring connections to mixing valve. Ensure all are secure. 3. Replace mixing valve. 4. If the problem persists, replace the main control.
Er:68	Mixing Valve Operation Error (Mixing Valve Stuck in Initial Position)	This Error Code will go away when the condition is remedied. If Error happens again: 1. Turn power OFF and ON at the main power switch internal to the appliance. 2. Check wiring connections to mixing valve. Ensure all are secure. 3. Replace mixing valve. 4. If the problem persists, replace the main control.
Er:70	Register, Ram, Rom, I/O Port, AD Abnormal, Important EPROM Data or Safe Data Abnormal	This Error Code will go away when the condition is remedied. If Error happens again: 1. Turn power OFF and ON at the main power switch internal to the appliance. 2. If the problem persists, replace the main control.
Er:72	Flame Signal Detected before Ignition	This Error Code will go away when the condition is remedied. If Error happens again: 1. Check the appliance cover. Ensure it is secure. Flame detection sensor can detect an external light source. 2. Check flame detection sensor. Ensure connections are secure. Normal operating settings are more than 2.5DC before ignition, less than 2.5DC after ignition. 3. If the problem persists, replace the main control.
Er:76	Poor Communication	This Error Code will go away when the condition is remedied. If Error happens again: 1. Check connections from main control to display panel. 2. If the problem persists, replace the display and/or the main control.
Er:80	Low Water Level Sensor (Low Water Level Detected Four (4) Consecutive times)	This Error Code will go away when the condition is remedied. If Error happens again: 1. Ensure all valves are open to the appliance and there are no leaks. 2. Ensure all air has been purged from the system. 3. Check wiring connections to low water level sensor. Ensure all are secure. 4. Check low water level sensor resistance. If resistance is zero, replace the sensor. 5. If the problem persists, replace the main control.
Er:81	Low Water Level Circuit	This Error Code will go away when the condition is remedied. If Error happens again: 1. Ensure all valves are open to the appliance and there are no leaks. 2. Check wiring connections to low water level sensor. Ensure all are secure. 3. Check low water level sensor resistance. If resistance is zero, replace the sensor. 4. If the problem persists, replace the main control.
Er:85	Freeze Protection (Appliance has detected water temperature below 34ºF (1ºC)	This Error Code will go away when the freezing condition is remedied. If Error happens again: 1. Ensure boiler is located in a mechanical room protected from freezing conditions. 2. Ensure all valves are open to the boiler and there are no leaks. 3. Check wiring connections to the supply temperature (OP) sensor. Ensure all are secure. 4. Check supply temperature (OP) sensor resistance. If resistance is zero, replace the sensor. 5. If the problem persists, replace the main control.
Er:94	Exhaust Sensor detects Vent Temperature is Greater than 190ºF (88ºC)	This Error Code will go away when the condition is remedied. If Error happens again: 1. Check if dip switch High Fire setting is ON. Switches 6 and 7 should be OFF for normal operation. 2. Check exhaust temperature sensor. Ensure connections are secure. 3. Check sensor resistance. If resistance is zero, replace the sensor. 4. Check exhaust vent for blockage. 5. If the problem persists, replace the control. 6. If the problem persists, replace the heat exchanger.

Table 24 – Error Codes with Linked Components, Effects, and Actions

K. ERROR TREE ANALYSIS

1. FLAME DETECTION

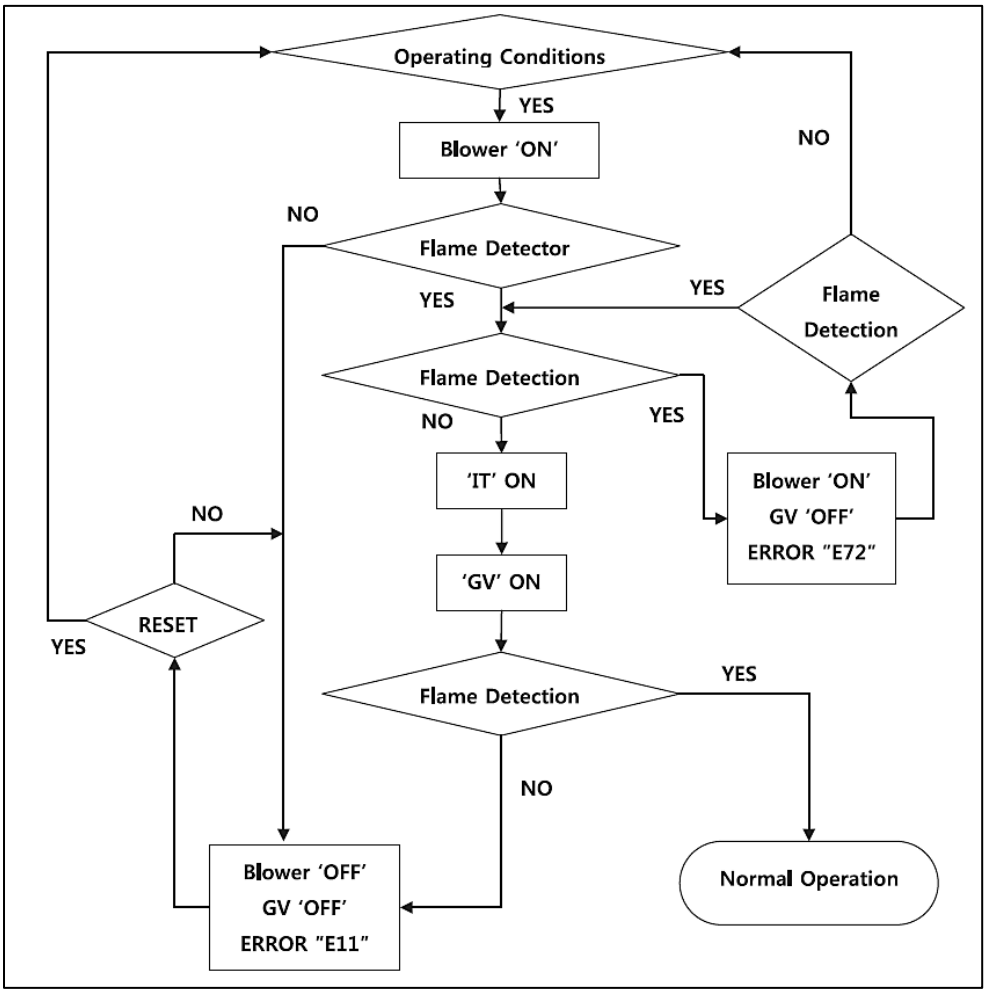

Figure 44 – Flame Detection Error Analysis Tree

2. GAS DETECTION

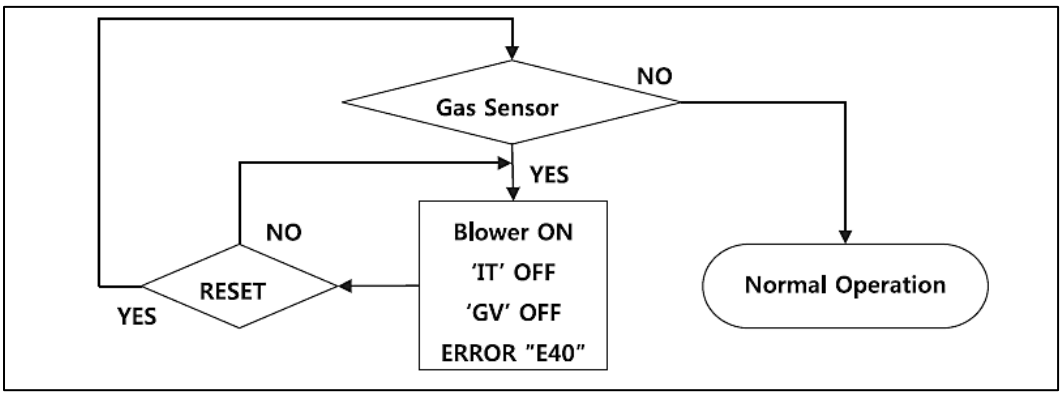

Figure 45 – Gas Detection Error Analysis Tree

3. APS / BURNER OVERHEAT LIMIT / CONDENSATE BLOCK SWITCH

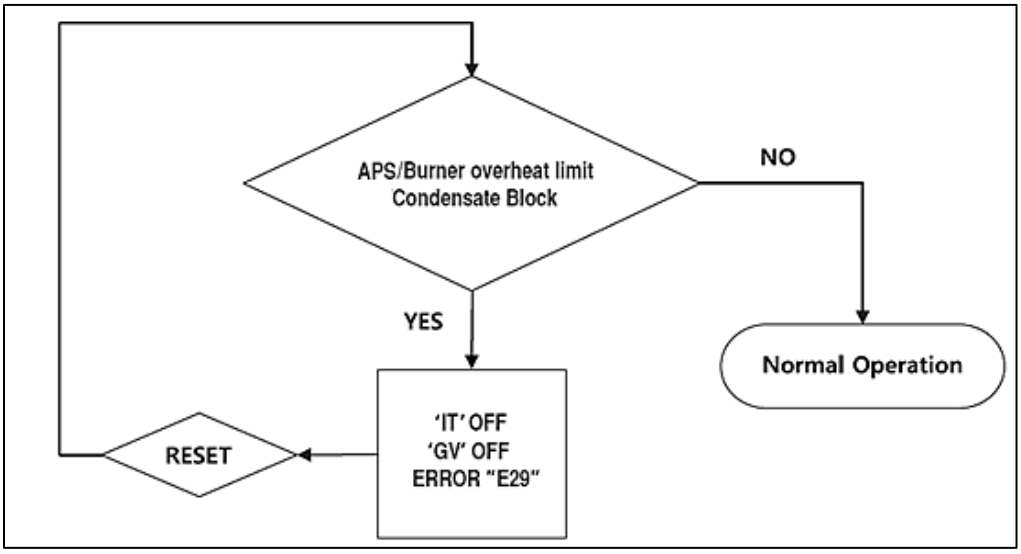

Figure 46 – APS / Burner Overheat Limit / Condensate Block Switch Error Analysis Tree

4. DHW / OP / CH OVERHEAT / EXHAUST OVERHEAT SENSORS

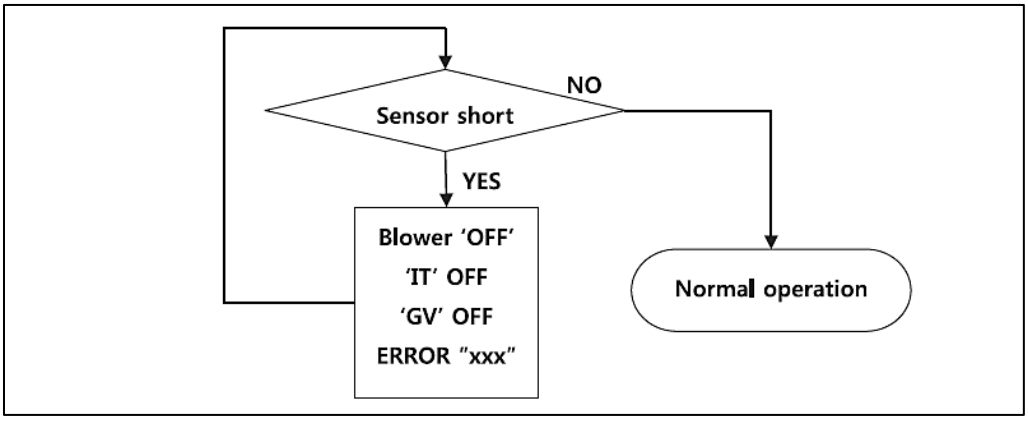

Figure 47 – DHW / OP / CH Overheat / Exhaust Overheat Sensors Error Analysis Tree

L. OUTDOOR TEMPERATURE MODE (OPTIONAL)

NOTE: If the system requires a fixed operating temperature, the outdoor sensor is not required and should not be installed.

There is no connection required if an outdoor sensor is not used in the installation.

1. Use a minimum 22 AWG wire for runs of 100 feet or less and minimum 18 AWG wire for runs of up to 150 feet.

2. Mount the outdoor sensor on an exterior surface of the building, preferably on the north side in an area that will not be affected by direct sunlight and will be exposed to varying weather conditions.

NOTE: For correct mounting procedures, follow instructions provided with the sensor.

NOTE: If sensor wires are located in an area with sources of potential electromagnetic interference (EMI), the sensor wires should be shielded, or the wires routed in a grounded metal conduit. If using shielded cable, the shielding should be connected to the common ground of the appliance.

NOTE: Outdoor Temperature Mode Icon on the display will flash if an Outdoor Sensor or 0-10 Volt is not connected to the appliance.

See Figure 48 to set your Outdoor Reset Curve.

To check the CH Target Temperature while using Outdoor Temperature Mode, press the button while the appliance is operational and the display panel is powered on.

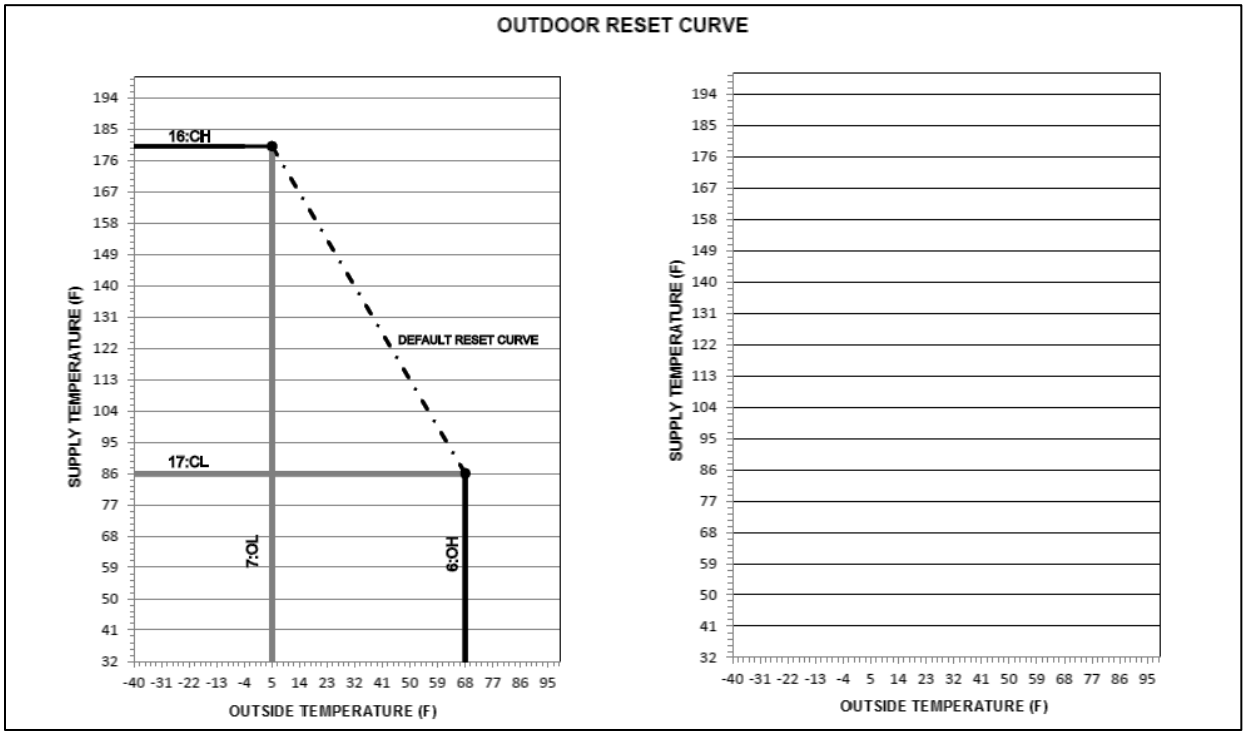

Figure 48 – Outdoor Reset Curve – See Installer Mode for Curve Setting Descriptions

M. 0-10 VOLT INPUT

1. A signal from a building management system may be connected to the appliance to enable remote control. This signal should be a 0-10 volt positive-going DC signal. When the 0-10V input is wired to the appliance terminal strip, a building control system can be used to control the set point temperature of the appliance. The control interprets the 0-10 volt signal as follows; when the signal is between 0 and 1.5 volts, the appliance will be in standby mode, not firing. When the signal rises above 1.5 volts, the appliance will ignite. As the signal continues to rise towards its maximum of 10 volts, the appliance will increase in set point temperature.

2. Connect a building management system or other auxiliary control signal to the terminals marked for this purpose on the appliance terminal block (shown in Piping Diagrams, this manual). Caution should be used to ensure that the 0-10 VOLT + connection does not become connected to ground.

NOTE: Ensure that the polarity of the connections from the external modulating appliance controller to the appliance is correct. Reversed polarity could lead to erratic and/or no response from the appliance controller.

NOTE: Outdoor Temperature Mode Icon on the display will flash if an Outdoor Sensor or 0-10 Volt is not connected to the appliance.

0-10 V INPUT TABLE:
When outside voltage is applied to the connector (2) in the wiring diagram,

1. The Outdoor temperature sensor does not work.
2. Symbol is displayed.
3. The heating temperature is automatically set according with the external voltage input.

NOTE: 0-10V is prioritized over T/T. If input voltage is less than 1.5V then T/T will operate.

The range of input voltage is approximately 1.5[V] ~ 10[V] and the heating temperature settings according to this range are as follows.

Input voltage[V]	Heat temperature [℃]	Heat temperature [℉]
1.5	30.0	86
2.0	32.7	91
2.5	36.1	97
3.0	38.8	102
	…	
9.0	75.0	167
9.5	77.7	172
10	82.2	180

Table 25 – 0-10V Input Voltages and Associated Temperatures

PART 11 – START-UP PREPARATION

⚠ WARNING

Thoroughly clean and flush any system that has used glycol before installing the appliance.

A. CHECK / CONTROL WATER CHEMISTRY

CAUTION

Chemical imbalance of the water supply may affect efficiency and cause severe damage to the appliance and associated equipment. Water quality must be professionally analyzed to determine whether it is necessary to treat the water. Various solutions are available to adjust water quality. Adverse water quality will affect the reliability of the system. In addition, operating temperatures above 135ºF will accelerate the build-up of lime scale and possibly shorten appliance service life. Failure of an appliance due to lime scale build-up, low pH, or other chemical imbalance IS NOT covered by the warranty.

The water must be potable, free of corrosive chemicals, sand, dirt, and other contaminates. It is up to the installer to ensure the water does not contain corrosive chemicals or elements that can damage the heat exchanger. Potable water is defined as drinkable water supplied from utility or well water in compliance with EPA secondary maximum contaminant levels (40 CFR Part 143.3) as shown in the table below. If the water contains contaminants higher than outlined by the EPA, water treatment is recommended and additional, more frequent maintenance may be required.

If you suspect that your water is contaminated in any way, discontinue use of the appliance and contact an authorized technician or licensed professional.

Contaminant	Maximum Allowable Level	Contaminant	Maximum Allowable Level
Total Hardness (Residential Use - Below 140ºF water temperature)	200 mg/l (12 grains/gallon)	Manganese	0.05 mg/l or PPM
Total Hardness (Commercial Use - 140ºF and above water temperature)	120 mg/l (7 grains/gallon)	pH	6.5-8.5
Aluminum	0.05 to 0.2 mg/l or PPM	Sulfate	205 mg/l or PPM
Chloride	100 mg/l or PPM	Total Dissolved Solids (TDS)	500 mg/l or PPM
Copper	1 mg/l or PPM	Zinc	5 mg/l or PPM
Iron	0.3 mg/l or PPM	Dissolved Carbon Dioxide (CO2)	15 mg/l or PPM

Table 26 – Water Chemistry Specifications

Clean system to remove sediment*

1. You must thoroughly flush the system (without the appliance connected) to remove sediment. The high-efficiency heat exchanger can be damaged by buildup or corrosion due to sediment.

2. For zoned systems, flush each zone separately through a purge valve. (If purge valves and isolation valves are not already installed, install them to properly clean the system.)

3. Flush system until water runs clean and you are sure piping is free of sediment.

***NOTE:** It is recommended you clean heat exchanger at least once a year to prevent lime scale buildup. Follow the maintenance procedure to clean the heat exchanger in this manual.

NOTE: APPLIANCE FAILURE DUE TO IMPROPER WATER CHEMISTRY IS NOT COVERED BY WARRANTY.

B. GLYCOL ANTIFREEZE SOLUTIONS

⚠ WARNING

Use only inhibited propylene glycol solutions which are specially formulated for hydronic systems. Ethylene glycol is toxic and can attack gaskets and seals used in hydronic systems. Glycol mixtures should not exceed 50%.

- Glycol in hydronic applications should include inhibitors that prevent the glycol from attacking metallic system components. Make certain that the system fluid is checked for the correct glycol concentration and inhibitor level.
- The glycol solution should be tested at least once a year or as recommended by the glycol manufacturer.
- Anti-freeze solutions expand more than water. For example: A 50% by volume solution expands 4.8% in volume for a temperature increase from 32ºF to 180ºF, while water expands 3% over the same temperature rise. Allowances must be made in system design for expansion.
- A 30% mixture of glycol will result in a BTU output loss of 15% with a 5% increase in head against the system circulator.

- A 50% mixture of glycol will result in a BTU output loss of 30% with a 50% increase in head against the system circulator.
- **NOTE:** BTU losses apply to both CH and DHW.

⚠ CAUTION

It is highly recommended to carefully follow the glycol manufacturer's recommended concentrations, expansion requirements, and maintenance recommendations (pH additive breakdown, inhibitor reduction, etc.) You must carefully calculate the additional friction loss in the system as well as the reduction in heat transfer coefficients.

C. CHECK FOR GAS LEAKS

⚠ WARNING

Before starting the appliance, and during initial operation, smell near the floor and around the appliance for gas odorant or any unusual odor. Remove appliance front door and smell interior of appliance enclosure. Do not proceed with startup if there is any indication of a gas leak. Repair any leaks at once.

PROPANE APPLIANCES ONLY – Propane suppliers mix an odorant with the gas to make its presence detectable. In some instances, the odorant can fade, and the gas may no longer have an odor. Before startup and periodically thereafter, have the propane supplier verify the correct odorant level in the gas.

⚠ WARNING

FOR YOUR OWN SAFETY READ BEFORE OPERATING

1. This appliance does not have pilot. It is equipped with an ignition device which automatically lights the burner. Do not try to light the burner by hand.

2. BEFORE OPERATING: smell all around the appliance area for gas. Be sure to smell next to the floor because some gas is heavier than air and will settle on the floor.

WHAT TO DO IF YOU SMELL GAS

- Do not try to light any appliance.
- Do not touch any electric switch; do not use any phone in your building.
- Immediately call your gas supplier from a neighbor's phone. Follow the gas suppliers' instructions.
- If you cannot reach your gas supplier, call the fire department.
- Turn off gas shutoff valve (located outside of the appliance) so that the handle is crosswise to the gas pipe. If the handle will not turn by hand, don't try to force or repair it, call a qualified service technician. Force or attempted repair may result in a fire or explosion.

4. Do not use this appliance if any part has been under water. Immediately call a qualified service technician to inspect the appliance and to replace any part of the control system and any gas control that has been damaged.

5. The appliance shall be installed so the gas ignition system components are protected from water (dripping, spraying, rain, etc.) during appliance operation and service (circulator replacement, condensate trap, control replacement, etc.)

Failure to follow these instructions could result in property damage, serious personal injury, or death.

⚠ WARNING

If you discover any evidence of a gas leak, shut down the appliance at once. Find the leak source with a bubble test and repair immediately. Do not start the appliance again until the leak is repaired. Failure to comply could result in substantial property damage, severe personal injury, or death.

D. FILL AND TEST WATER SYSTEM

⚠ WARNING

Ensure the appliance is full of water before firing the burner. Failure to do so will damage the appliance. Such damage IS NOT covered by warranty, and could result in property damage, severe personal injury, or death.

1. Fill the system only after ensuring water chemistry meets the requirements listed in this manual.

2. Close the manual and automatic air vents and appliance drain valve.

3. Fill to the correct system pressure. Correct pressure will vary with each application.
   a. Typical cold water fill pressure for a CH residential system is 12 psi.
   b. Pressure will rise when appliance is turned on and system water temperature increases. Operating pressure of the CH system should never exceed 25 psi, and must never exceed the relief valve pressure setting.

4. At initial fill and during appliance startup and testing, check system thoroughly for leaks. Repair all leaks before proceeding further.

⚠ WARNING

Eliminate all system leaks. Continual fresh make-up water will reduce appliance life. Minerals can build up in the heat exchanger, reducing heat transfer, overheating the heat exchanger, causing heat exchanger failure and possibly resulting in property damage, severe personal injury, or death.

5. The system may have residual substances that could affect water chemistry. After the system has been filled and leak tested, verify that water pH and chlorine concentrations are acceptable by sample testing.

⚠ CAUTION

It is important to purge the system of air to avoid damage to the appliance.

E. PURGE AIR FROM CH AND INTERNAL STORAGE TANK

CAUTION

IMPORTANT! While commissioning the system, the air vent on top of the appliance must remain fully open to allow the appliance to properly fill. Failure to keep the air vent open could lead to improper appliance and system operation.

To purge air from the system:

a. Connect a hose to the purge valve and route hose to an area where water can drain and be seen.
b. Close the appliance or system isolation valve between the purge valve and fill connection to the system.
c. Close zone isolation valves.
d. Open quick-fill valve on cold water make-up line.
e. Open purge valve.
f. Open the isolation valves one zone at a time. Allow water to run through the zone, pushing out the air. Run water until no noticeable air flow is present. Close the zone isolation valves and proceed with the next zone. Follow this procedure until all zones are purged.
g. Close the quick-fill water valve and purge valve and remove the hose. Open all isolation valves. Watch the system pressure rise to correct cold-fill pressure. It is recommended that you put the pumps into manual operation to assist in purging the circuits.
h. Disconnect the wires that are connected to the THERMOSTAT terminals of the terminal block. Apply power to the appliance. After the control goes through the start-up sequence, the display will turn off.
i. Press and hold the button for five seconds. Then scroll to 29:AP by turning the dial . Press the button. AP:cP will show on the display. Press the button to change the test time. The default is five minutes. Turn the dial counterclockwise to lower or clockwise to raise the displayed value. Press the button again to save any changes.
j. Then use the dial to scroll to cP:off. Press the button to turn on test mode. Turn the dial counterclockwise to lower or clockwise to select on. Press the button again to start test mode.
k. The CH and internal circulation pumps will come on. Run pumps as required to help bleed out all entrapped air. Some good indicators that air is removed include the absence of gurgling noises in the pipes and pump operation becoming very quiet. Test mode will stop automatically after the set time (default is five minutes), or press the button to leave it manually.
l. After the system has operated for some time, eliminate any residual air by using the manual air vents located throughout the system.
m. If purge valves are not installed in the system, open manual air vents in the system one at a time, beginning with the lowest floor. Close vent when water squirts out. Repeat with remaining vents.
n. Refill to correct pressure.

F. PURGE AIR FROM DHW SYSTEM

1. Make sure CH and DHW lines to the appliance are open and full of water. Turn on all electric power to appliance.

⚠ WARNING

Ensure the appliance is full of water before firing the burner. Failure to do so will damage the appliance. Such damage IS NOT covered by warranty, and could result in property damage, serious personal injury, or death.

2. Open hot water faucets in the DHW system. Start with the faucets nearest the appliance.

3. Keep faucets open until water runs freely and all air is purged. Then move on to faucets further away from the appliance in the system.

4. When water flows freely from all hot water faucets, DHW purging is complete.

G. CHECK THERMOSTAT CIRCUIT(S)

1. Disconnect the two external wires connected to the appliance thermostat terminals (low voltage terminal strip).

2. Connect a voltmeter across these two incoming wires with power supplied to the thermostat circuits. Close each thermostat, zone valve and relay in the external circuit one at a time and check the voltmeter reading across the incoming wires.

3. There should NEVER be a voltage reading.

4. If a voltage reading does occur under any condition, check and correct the external wiring. (This is a common problem when using 3-wire zone valves.)

5. Once the external thermostat circuit wiring is checked and corrected if necessary, reconnect the external thermostat circuit wires to the appliance low voltage terminal strip. Allow the appliance to cycle.

H. CONDENSATE REMOVAL

1. This is a high efficiency condensing appliance. Therefore, the appliance has a condensate drain. Condensate fluid is nothing more than water derived from combustion products, similar to that produced by an automobile when it is initially started.

Condensate is slightly acidic (typically with a pH of 3 to 5) and must be piped with the correct materials. Never pipe the condensate using steel, copper, brass or other materials that will be subject to corrosion. Plastic PVC or CPVC pipe are the only approved materials.

A condensate neutralizer, if required by local authorities, may be purchased from HTP (7450P-212).

2. The appliance is provided with a ½" X ¾" reducing coupling that must be installed on the appliance before the condensate is piped to a local drain. It is very important that the minimum ¾" condensate line is sloped downward away from the appliance to a suitable inside drain. If the condensate outlet on the appliance is lower than the drain, you must use a condensate removal pump, available from HTP (554200). This pump is equipped with two leads that can be connected to an alarm or another type of warning device to alert the user of a condensate overflow, which, if not corrected, could cause property damage.

3. If a long horizontal run is used, it may be necessary to create a vent in the horizontal run to prevent a vacuum lock in the condensate line.

4. Do not expose the condensate to freezing temperatures.

5. It is very important you support the condensate line to assure proper drainage.

I. FINAL CHECKS BEFORE STARTING APPLIANCE

1. Verify the appliance and system are full of water and all system components are correctly set for operation.

2. Fill the condensate trap with water.

3. Verify electrical connections are correct and securely attached.

4. Inspect exhaust vent and intake piping for signs of deterioration from corrosion, physical damage, or sagging. Verify exhaust vent and intake piping are intact and correctly installed per Venting Section (this manual) and local codes.

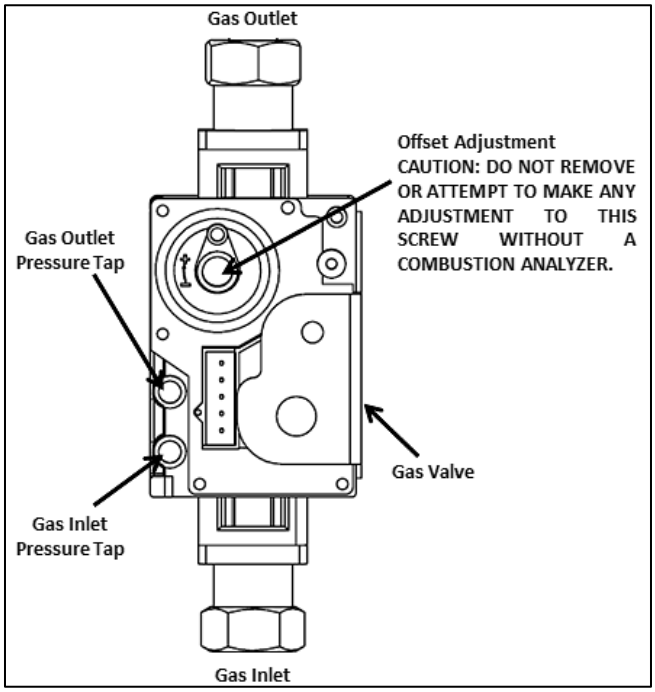

Figure 49 –Gas Valve Detail

J. ADJUSTING GAS PRESSURE AT THE APPLIANCE

NOTE: Refer to Figure 49 when adjusting gas pressure. Loosen the screw before checking the gas inlet pressure.

1. The appliance and its individual shutoff valve must be disconnected from the gas supply piping system during any pressure testing of the system at test pressures greater than ½ psi (3.5 kPa).

2. The appliance must be isolated from the gas supply piping system by closing its individual manual shutoff valve during any pressure testing of the gas supply piping system at test pressures equal to or less than ½ psi (3.5 kPa).

NOTICE

Do not fire (operate) the appliance until all connections have been completed and the heat exchanger is filled with water. Doing so will damage the appliance and void the warranty.

ADJUSTING GAS PRESSURE AT THE APPLIANCE

1. Open the gas line and water valves.

2. Use a Phillips Head screwdriver to remove the appliance top cover. Remove the front cover.

3. Loosen the gas inlet pressure tap screw three turns with a screwdriver. Connect the manometer to the inlet gas pressure port. See Figure 49.

4. Turn on power to the appliance and open a hot water faucet.

5. The minimum and maximum inlet gas line pressures must meet the requirements shown in Table 26.

LP GAS		NATURAL GAS	
Minimum Pressure	3.5” WC	Minimum Pressure	3.5” WC
Maximum Pressure	14” WC	Maximum Pressure	14” WC

Table 27 – Gas Pressure Requirements

6. Remove the manometer. Close the screw on the gas inlet pressure tap.

K. SETTING AND VERIFYING THE COMBUSTION SETTING

1. After the appliance has fired, flip DIP switch seven (7) to the ON position (low fire). Proceed to check appliance combustion values.

NOTE: Use a combustion analyzer to ensure CO and CO_2 values are within the range shown in Table 27.

⚠ WARNING

It is required to use a combustion analyzer to verify final adjustment according to the combustion chart (Table 27). Failure to do so could result in serious personal injury or death.

If the readings obtained are lower or higher than the combustion readings in Table 27, use a 4mm Allen key to adjust the offset screw in a clockwise (positive) or counterclockwise (negative) direction (approximately 1/4 turn). See Figure 50. Check your combustion values. Repeat this procedure until the values obtained on the combustion analyzer agree with those stated in Table 27.

NOTE: If the appliance makes a whistling sound (harmonics) at low fire, adjust the offset screw in a clockwise (positive) direction (approximately 1/8 turn). Check your combustion values and ensure they agree with those stated in Table 27 before proceeding.

⚠ WARNING

It is very important that this conversion be set within the recommended CO measurements listed in Table 27. Visually looking at the burner does not determine combustion quality. Failure to measure combustion with a Combustion Analyzer and set the throttle within the recommended CO measurements could result in property damage, severe personal injury, or death.

COMBUSTION SETTINGS FOR 140W / 199W				
	NATURAL GAS		LP GAS	
FAN SPEED	LOW	HIGH	LOW	HIGH
CO PPM	≤60	≤200	≤60	≤200
CO_2 (%)	8 - 10	8 ½ - 10 ½	9 – 10 ½	9 ½ - 10 ½

Table 28 – Combustion Settings

Figure 50 – Gas Valve Offset Screw

2. When low fire settings have been obtained, flip DIP switch seven (7) to its original (OFF) position. This will return the appliance to normal mode.

*3. Flip DIP switch six (6) to ON (high fire). Again check combustion readings with a combustion analyzer.

4. When complete, flip DIP switch six (6) to its original (OFF) position. This will return the appliance to normal mode.

5. Allow appliance to operate normally. Ensure it is operating properly.

6. Reinstall the appliance front cover.

7. Use a Phillips Head screwdriver to reinstall the appliance top cover.

*In order to increase CO_2 values on high fire, the gas orifice size can be increased to achieve the maximum CO_2 value listed in Table 27. Contact the factory for recommended orifice sizes to achieve the desired setting.

PART 12 –INSTALLATION AND START-UP CHECKLIST

LIGHT OFF ACTIVITIES		DATE COMPLETED	
		YES	**NO**
1) Fill the Heating System with Water	Has the system been cleaned and flushed?		
	Does water chemistry meet requirements?		
	If water chemistry does not meet requirements, are treatment measures put in place?		
	Check all water piping and connections. Are all leak free and properly supported?		
	Has the CH system been pressure tested and pressurized to 12 – 25 psi? Has the DHW system been pressure tested?		
2) Exhaust Vent and Intake Piping	Has the appliance been vented in accordance with the methods and materials listed in this manual and to meet local codes (vented in approved materials, air supply sufficient for proper operation, combined vent length within the maximum vent length restriction, vent lengths minimized, installed with proper terminations, clearances, and pitch, etc.?		
	Is vent piping properly supported?		
	Has exhaust vent piping been checked for leaks?		
	Have the exhaust vent and intake pipes been properly installed into the connectors provided on the appliance?		
3) Condensate Piping / Tubing and Components	Have all condensate line components included with the appliance been installed?		
	Is the condensate line piped with the approved materials listed in this manual?		
	Has the condensate line been routed to a laundry tub or other drain?		
	If necessary, has a condensate pump and/or neutralizer been installed?		
4) Gas Piping	Has the gas supply line been piped in accordance with the methods listed in this manual (supply line no less than ½" in diameter, length and diameter adequate to deliver the required BTUs, union and shut-off valve installed, etc.)?		
	Does the gas type match the type indicated on the appliance rating plate?		
	Has gas supply line pressure been measured (between 3.5 and 14" WC)?		
	Has the gas supply line been leak tested per locally approved methods?		
5) Pressure Relief Valves	Have you installed approved pressure relief valves on the appliance?		
	Is the pressure relief valve in the CH line at least 1" in diameter and rated to 30 psi?		
	Is the pressure relief valve in the DHW line at least ¾" in diameter and rated to 150 psi?		
6) Wire the Appliance	Have you connected the power and control wiring per appliance wiring diagram, this manual?		
	Have all DIP switches been set on the main appliance board?		
	Is electrical connection polarity within appliance requirements?		
	Do power specifications meet appliance requirements? 120V AC?		
7) Start-Up, Adjust, and Test	If necessary, has the appliance been converted to operate on the proper fuel type?		
	Has the appliance been started?		
	Has CO2 and CO been checked to ensure proper combustion?		
	If necessary, has the appliance gas valve been adjusted to achieve proper combustion?		
	Has the installation been customized per location requirements?		
	Have all customized system parameters been tested?		
	Has proper appliance operation been confirmed?		
	Has the burner flame been checked? Is the burner flame a proper blue color? See Figure 51 for flame sight glass window location.		
	If the flame does not appear normal, the combustion system may need to be cleaned or adjusted by a qualified service technician.		
FINAL INSTALLATION APPROVALS	**SIGNED BY TECHNICIAN**	**DATE**	

Table 29 – Final Installation Checklist

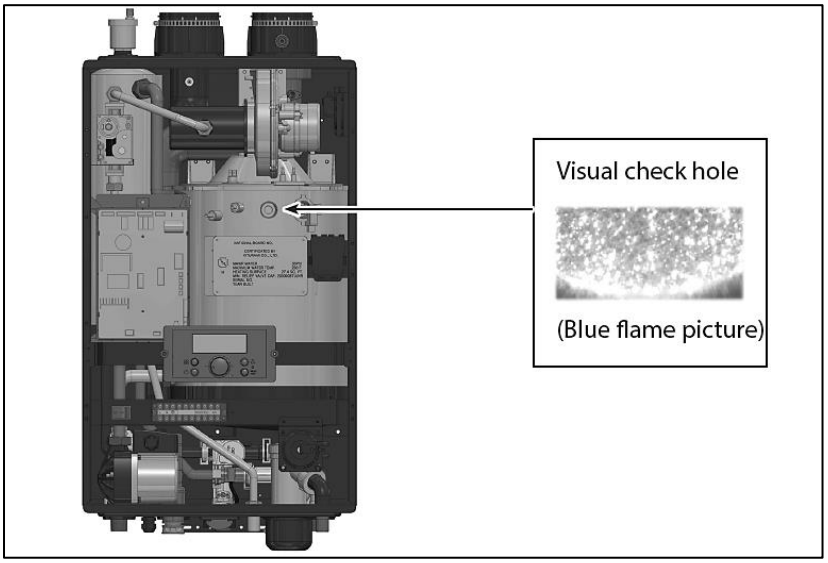

Figure 51 – Flame Sight Glass

CH Return Temperature Sensor (7855P-097) Exhaust Temperature Sensor (7855P-092) Storage Tank Temperature Sensor (7855P-057)		CH Supply Temperature Sensor (7855P-030) DHW Temperature Sensor (7855P-094)		Outdoor Temperature Sensor (7855P-084)	
Temperature (◦F)	**Resistance (Ω)**	**Temperature (◦F)**	**Resistance (Ω)**	**Temperature (◦F)**	**Resistance (Ω)**
-4	62162	-4	28409	-4	99200
5	48440	5	22152	5	74229
14	38045	14	17408	14	56090
23	30107	23	13782	23	42790
32	23998	32	10990	32	32930
41	19261	41	8824	41	25550
50	15562	50	7131	50	19990
59	12655	59	5800	59	15760
68	10353	68	4747	68	12510
77	8520	77	3906	77	10000
86	7051	86	3233	86	8050
95	5867	95	2690	95	6520
104	4908	104	2250	104	5310
113	4125	113	1891	113	4350
122	3485	122	1598	122	3590
131	2957	131	1356		
140	2520	140	1155		
149	2157	149	989		
158	1854	158	850		
167	1600	167	733		
176	1386	176	635		
185	1205	185	552		
194	1051	194	482		
203	920	203	421		
212	808	212	370		

Table 30 – Temperature Sensor Resistance

PART 13 – TROUBLESHOOTING

TROUBLESHOOTING CHART		
PROBLEM	**POSSIBLE CAUSES**	**POSSIBLE REMEDIES**
No electrical power to the appliance	1. Is the plug on the power supply cord unplugged from the electrical outlet? 2. Is electrical panel's 10 Amp circuit breaker tripped? 3. Is the fuse on the circuit board good? 4. Is there a power outage to the home?	1. Reset the plug. 2. Reset the circuit breaker. 3. If the display panel is blank, unplug the unit or contact an authorized service technician. 4. Contact the power company.
No water available when a faucet is opened	1. Is the water supply valve shut off at the meter (do cold water faucets work)? 2. Is the water supply valve near the unit open? 3. Is the water pipe frozen? 4. Is an error code flashing on the display panel (leak detected)?	1. Open the closed supply valve. 2. Open the water supply valve. 3. Turn OFF the unit, close all water valves and the gas valve. Contact an authorized service technician. 4. Refer to error code information and contact an authorized service technician.
Hot water is not available when the faucet is opened.	1. Does the appliance have power (plugged in)? 2. Is the appliance turned ON? 3. Is an error code flashing on the display panel? 4. Is the gas supply valve open or shut off at the meter (do other gas devices work)?	1. Restore electrical power to the unit. 2. Press and hold the **Power** button to turn the unit ON. 3. Refer to the Diagnostic and Error Codes section in this manual. 4. Open the gas supply valve.
The water temperature is not hot enough or turns cold during use.	1. Is the faucet open enough to draw at least 0.6 gallons (2.3L) per minute through the appliance? 2. Is an error code flashing on the display panel? 3. Is the outlet water temperature set too low?	1. Open the faucet to allow more water flow. 2. Refer to the Diagnostic and Error Codes section in this manual. 3. Adjust the outlet water temperature (refer to the procedure in this manual).
It takes a long time before hot water flows from the faucet.	Is the faucet some distance from the appliance?	a. Allow time for the cold water already in the pipes to flow from the faucet. b. Have recirculation valves and/or plumbing return line(s) installed and program the unit for recirculation mode.
The water is not hot enough.	Is the water temperature set too low?	Adjust the temperature setting.
The water at the faucet is too hot.	Is the water temperature set too high?	Adjust the temperature setting.
A fan can be heard even when the unit is not operating.	1. The fan continues to operate after the burner shuts off to clear the exhaust vent of combustion gases. 2. The fan may run to help prevent freezing.	1. This is normal operation – no action is required. 2. Protect the appliance from freezing temperatures or shut off and drain the unit.
White "smoke" can be seen coming out of the exterior exhaust gas vent.	Depending on the outside temperature, water vapor can be produced as the exhaust is vented.	This is normal operation – no action is required.

Table 31 – Troubleshooting Chart

DIAGNOSTICS AND SUGGESTED CORRECTIVE ACTIONS

The appliance control is able to record information about the appliance's condition at the time of the five previous faults or errors. This information is available to view in the Installer Mode under the History screen.

The following screens may be displayed when reviewing the appliance history. The table below also includes diagnostic information and possible corrective actions.

Display	Condition	Diagnostic	Possible Corrective Actions
Nothing appears on the display control panel but the blower runs at full speed	Control is not receiving power	Check wiring for short circuit or incorrect wiring	Correct wiring per wiring diagram including connection of transformer to the control
		Check transformer connection to the control per wiring diagram. Check for 12V output of transformer	Replace transformer if it is receiving 120V, but not outputting 12 VAC
Nothing appears on the display control panel and no other appliance components are operating	Control is not receiving 120V power	Ensure service switch and/or circuit breaker to appliance is turned ON	Turn on service switch or circuit breaker to power appliance
		Is there 120V at the service switch	Troubleshoot and correct the power supply to the manual switch
		Is the ON/OFF switch inside the appliance cabinet is turned on	Turn ON the manual power switch inside the appliance cabinet

		Check for 120V at the line voltage terminal block located inside the appliance cabinet	Correct wiring inside the appliance cabinet using the wiring diagram in the installation manual
		Inspect the fuse. Replace as necessary	Replace the fuse with the proper part found in the replacement part section of this manual. If fuse blows again, recheck the wiring per diagram
Nothing appears on the display control panel, but the appliance is operating	Occurs when communications is lost from the control to the display	Check for loose connections and proper pin alignment / engagement on the control's plug	Check for continuity on the wire harness from the display to the control. See repair parts section for proper replacement part.
		Cycle power off and on using appliance power switch and check for operation	Replace with new display module. See repair parts section for proper replacement part.
Display repeatedly goes through initialization sequence	Occurs when control does not receive signal from fan	Cycle power off and on using appliance power switch and check for operation	Replace fan.

Table 32 –Diagnostics and Suggested Corrective Actions

PART 14 – ANNUAL MAINTENANCE PROCEDURES

⚠ DANGER

The appliance must be inspected and serviced annually, preferably at the start of the heating season, by a qualified service technician. In addition, the maintenance and care of the appliance as outlined in this manual must be performed by the user/owner to assure maximum efficiency and reliability. Follow the maintenance procedures given throughout this manual. Failure to perform the service and maintenance or follow the directions in this manual could damage the appliance or system components, resulting in substantial property damage, severe personal injury, or death.

Check the Surrounding Area

⚠ DANGER

To prevent the potential of substantial property damage, severe personal injury, or death, eliminate all the materials listed in Table 8 from the area surrounding the appliance and the vicinity of the combustion air intake. If contaminates are found:

- Remove products immediately from area.
- If contaminates have been there for an extended period, call a qualified service technician to inspect the appliance for possible damage from acid corrosion.

If products cannot be removed, immediately call a qualified service technician to re-pipe the combustion air intake piping away from the contaminated areas.

Combustible/Flammable Materials
Do not store combustible materials, gasoline, or other flammable vapors or liquids near the appliance. If found, remove these materials immediately.

Air Contaminates
If allowed to contaminate combustion air, products containing chlorine or fluorine will produce acidic condensate that will cause significant damage to the appliance. Read the list of potential contaminates and areas likely to have these contaminates in Table 8. If any of these contaminates are in the room where the appliance is located, or combustion air is taken from one of the areas listed, the contaminates must be removed immediately or the intake pipe must be relocated to another area.

Ensure the Appliance Cabinet is Closed
Ensure the appliance cabinet is closed. Tighten the two upper and lower screws to secure it. The cabinet must be closed while the appliance is running.

Check the Power Source
Make sure the power cord is properly connected. The main power line is connected to the manual switch box inside the appliance.

Check the Status of the Control Panel
Observe the Control Panel to ensure the appliance is powered on, and to check for any error codes. Clear any debris from the panel.

Check Exhaust Vent and Intake Pipe Terminations
Verify that the appliance exhaust vent and intake pipe terminations are clean and free of obstructions. Remove any debris from the exhaust vent or intake pipe openings. If removing the debris does not allow the appliance to operate correctly, contact your qualified service technician to inspect the appliance and the vent system.

Check CH and DHW Pressure Gauges

- Ensure the pressure reading on the CH gauge does not exceed 30 psig. Higher pressure readings may indicate a problem with the expansion tank.
- Ensure the pressure reading on the DHW gauge does not exceed 150 psig. Higher pressure readings may indicate a problem with the domestic expansion tank.
- Contact a qualified service technician if problem persists.

Check Exhaust Vent and Intake Piping

Visually inspect the exhaust vent for any signs of blockage, leakage, or deterioration of the piping. Inspect the exhaust vent bracing. Ensure bracing is undamaged and in good condition. Notify a qualified service technician immediately if any problems are found.

⚠ WARNING

Failure to inspect the venting system and have it repaired by a qualified service technician can result in vent system failure, causing severe personal injury or death.

Visually inspect the intake piping for any signs of blockage. Inspect the entire length of the intake pipe to ensure piping is intact and all joints are properly sealed. Inspect the intake pipe bracing. Ensure bracing is undamaged and in good condition. Notify a qualified service technician if any problems are found.

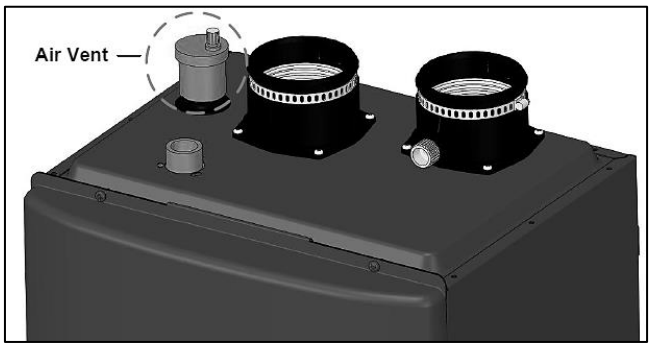

Figure 52 – Air Vent Detail

Check Pressure Relief Valve

- Visually inspect the primary pressure relief valve and discharge pipe for signs of weeping or leakage.
- If the pressure relief valve often weeps, the expansion tank may not be operating properly. Immediately contact a qualified service technician to inspect the appliance and system.

Check Vent Condensate Drain System

- While the appliance is running, check the discharge end of the condensate drain tubing. Ensure no flue gas is leaking from the condensate drain tubing by holding your fingers near the opening.
- If you notice flue gas leaking from the opening, this indicates a dry condensate drain trap. If problem persists, contact a qualified service technician to inspect the appliance and condensate line and refill the condensate trap.
- If applicable, check the condensate neutralizer and ensure it is full of condensate neutralizing marble chips.

Check the Air Vent

Loosen cap one counterclockwise turn to allow air vent to operate. See Figure 52. If the air vent valve works freely without leaking, close the valve by turning clockwise. If vent does not operate correctly, contact a qualified service technician to replace the vent.

Check Primary and Gas Piping

- Remove the appliance cover and perform a gas leak inspection following Operating Instructions, page 2, this manual. If gas odor or leak is detected, follow procedures on page 2. Call a qualified service technician.
- Visually inspect for leaks around the internal appliance water connections and around the heat exchanger. Visually inspect the external system piping, circulators, and system components and fittings. Immediately call a qualified service technician to repair any leaks.

⚠ WARNING

Have leaks fixed at once by a qualified service technician. Failure to comply could result in substantial property damage, severe personal injury, or death.

Operate Pressure Relief Valve

- Before proceeding, verify that the relief valve outlet has been piped to a safe place of discharge, avoiding any possibility of scalding from hot water.

⚠ WARNING

To avoid water damage or scalding due to relief valve operation, a discharge line must be connected to the valve outlet and directed to a safe place of disposal. This discharge line must be installed by a qualified service technician or heating/plumbing installer in accordance with the appliance installation manual. The discharge line must be terminated so as to eliminate possibility of severe burns or property damage should the valve discharge.

- Read the temperature and pressure gauge to ensure the system is pressurized. Minimum is 10 psi. Maximum is 25 psi. Lift the relief valve top lever slightly, allowing water to relieve through the valve and discharge piping.
- If water flows freely, release the lever and allow the valve to seat. Watch the end of the relief valve discharge pipe to ensure that the valve does not weep after the line has had time to drain. If the valve weeps, lift the lever again to attempt to clean the valve seat. If the valve does not properly seat and continues to weep, contact a qualified service technician to inspect the valve and system.
- If water does not flow from the valve when you completely lift the lever, the valve or discharge line may be blocked. Immediately shut the appliance down per instructions on page 2 and call a qualified service technician to inspect the valve and system.

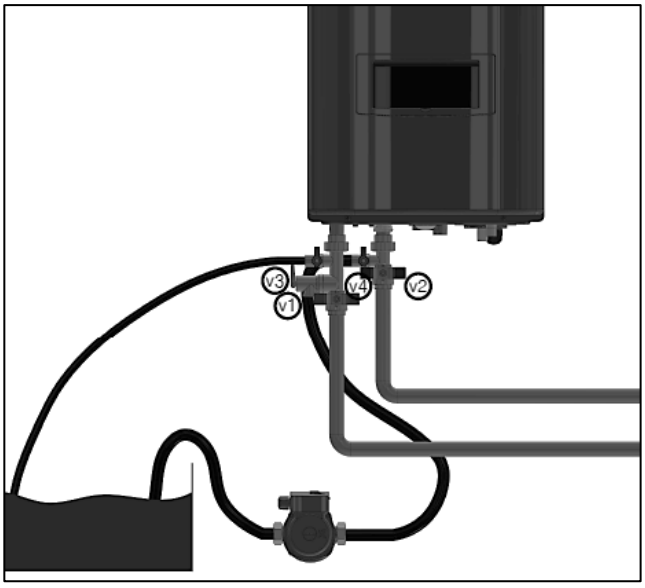

Figure 53 – Valve Detail

Check the Burner
Clean the exterior of the burner.

Flushing the CH Closed Loop Heat Exchanger
Flushing the heat exchanger is a complicated procedure that should only be performed by a qualified service technician. It is recommended to flush the heat exchanger annually if water hardness exceeds 12 grains per gallon (considered extremely hard water). If water hardness falls below 12 grains per gallon it is recommended to flush the heat exchanger every two to three years.

NOTE: Improper maintenance WILL VOID appliance warranty.

1. Disconnect electrical power to the appliance.

2. Close the shutoff valves on both CH supply and CH return lines (V1 and V2). See Figure 53.

3. Connect one hose (D1, Figure 54) to the valve (V3) and place the free end in a bucket. Connect one of the hoses (D3) to the circulation pump outlet and the cold water inlet line to valve V4. Connect the other hose (D2) to the circulation pump inlet and place the free end in the bucket.

4. Pour tankless cleaning solution into the bucket. Use an FDA approved cleaner for potable systems on the heat exchanger. Place the drain hose (D1) and hose D2 to the pump inlet in the cleaning solution.

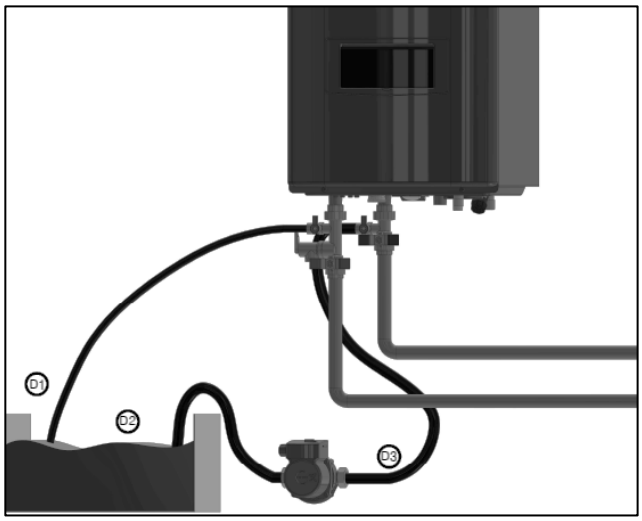

Figure 54 – Hose Connection Detail

5. Open service valves (V3 and V4) on the hot water outlet and cold water inlet lines.

6. Turn on the circulation pump. Operate the pump and allow the cleaning solution to circulate through the appliance for at least 1 hour at a rate of 4 gallons per minute.

7. Rinse the cleaning solution from the heat exchanger as follows:
   a. Remove the free end of drain hose D1 from the bucket.
   b. Close service valve V4 and open shutoff valve V2.
   c. Do not open shutoff valve V1.
   d. Allow water to flow through the appliance for 5 minutes.
   e. Close shutoff valve V2.

8. Disconnect hoses from lines. Properly dispose of used cleaning solution.

9. Remove the CH filter from the appliance and clean out any residues.

10. Repeat process on the DHW loop of the appliance.

Flushing the DHW Loop Heat Exchanger
Flushing the heat exchanger is a complicated procedure that should only be performed by a qualified service technician. It is recommended to flush the heat exchanger annually if water hardness exceeds 12 grains per gallon (considered extremely hard water). If water hardness falls below 12 grains per gallon it is recommended to flush the heat exchanger every two to three years.

NOTE: Improper maintenance WILL VOID appliance warranty.

1. Disconnect electrical power to the appliance.

2. Close the shutoff valves on both hot water outlet and cold water inlet lines (V1 and V2). See Figure 55-A.

3. Connect one hose (D1, Figure 55-B) to the valve (V3) and place the free end in a bucket. Connect one of the hoses (D3) to the circulation pump outlet and the cold water inlet line to valve V4. Connect the other hose (D2) to the circulation pump inlet and place the free end in the bucket.

4. Pour tankless cleaning solution into the bucket. Use an FDA approved cleaner for potable systems on the heat exchanger. Place the drain hose (D1) and hose D2 to the pump inlet in the cleaning solution.

5. Open service valves (V3 and V4) on the hot water outlet and cold water inlet lines.

6. Turn on the circulation pump. Operate the pump and allow the cleaning solution to circulate through the appliance for at least 1 hour at a rate of 4 gallons per minute.

7. Rinse the cleaning solution from the heat exchanger as follows:
   a. Remove the free end of drain hose D1 from the bucket.
   b. Close service valve V4 and open shutoff valve V2.
   c. Do not open shutoff valve V1.
   d. Allow water to flow through the appliance for 5 minutes.
   e. Close shutoff valve V2.

8. Disconnect hoses from lines. Properly dispose of used cleaning solution.

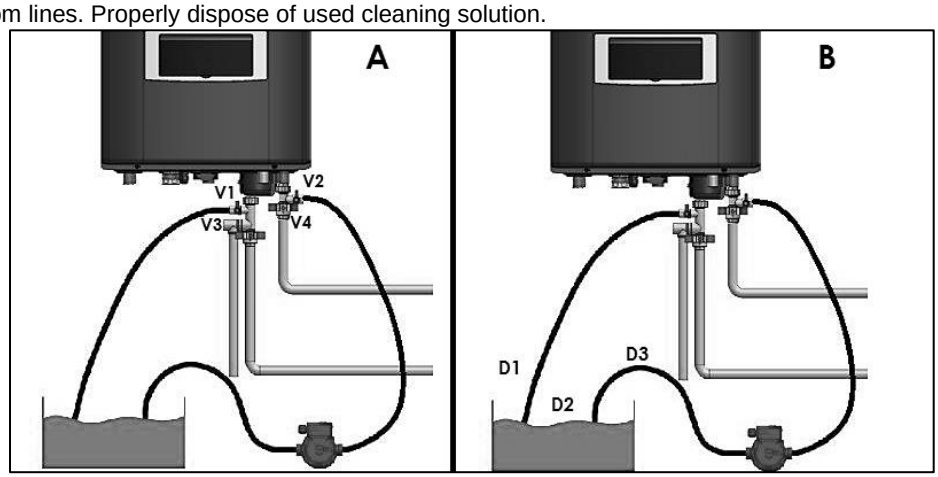

Figure 55 – A – Valve, and B – Hose Connection Details

10. Remove the DHW inlet filter from the appliance and clean out any residues.

Cleaning the CH and DHW Inlet Filters (Draining the Appliance)
1. Place a bucket under the appliance to collect the residual water inside the appliance.

2. Press the Power button on the control panel to turn off the electrical power to the appliance. Then turn off the gas valve.

3. Valve off the appliance from the system. If the appliance cannot be isolated from the system, turn off the main water valve.

4. Open the hot water faucets in the system to aid in draining the system.

⚠ WARNING
Water drained from the appliance could be scalding hot. Wait for the appliance to cool before removing the CH or DHW inlet filters. Failure to do so could result in property damage, personal injury, or death.

5. Remove the DHW inlet filter. Then clean it with a toothbrush and clean running water. See Figure 56.

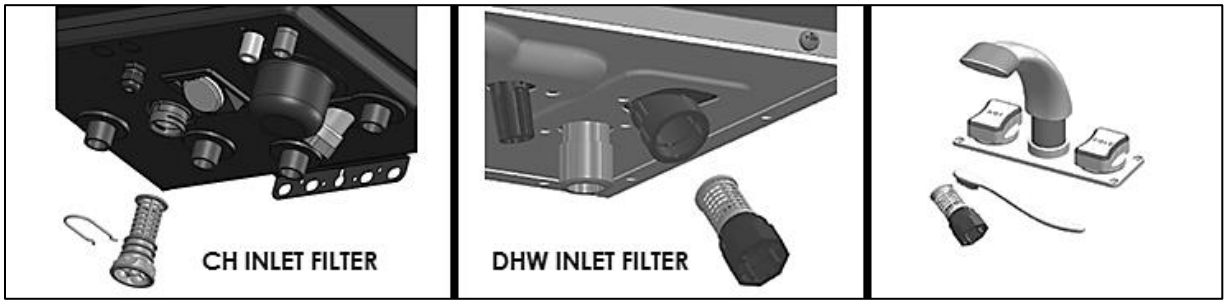

Figure 56 – Cleaning the Inlet Filter

6. Reinstall the DHW inlet filter.

7. Purge air from the DHW lines by opening a hot water faucet in the system. When water flows freely, all air is purged.

8. Repeat the process on the CH inlet filter on the appliance.

9. Restore water service to the appliance by opening the isolation valves, or turning on the main water valve.

10. Turn on the gas valve. Turn on electrical power to the appliance and press the Power button to turn the appliance on.

11. Reinsert the filter and ensure the filter cap is securely tightened.

12. Connect electrical power to the appliance.

Maintaining the Condensate System

⚠ DANGER

The condensate trap assembly MUST BE PROPERLY INSTALLED according to these instructions when operating the appliance. Operating the appliance without the condensate trap assembly will cause flue gases to leak and result in serious personal injury or death.

⚠ WARNING

When servicing is complete, make sure the condensate collector cap is replaced securely. Failure to do so will cause venting issues that will result in serious injury or death.

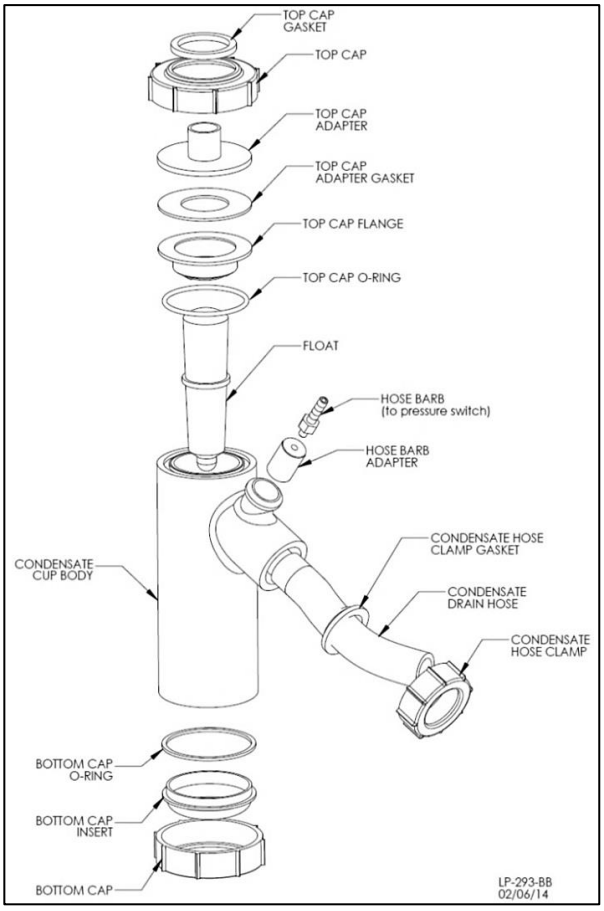

Figure 57 – Condensate Detail

1. Ensure the appliance is powered off and has had time to cool.

2. Remove the hose clamp attaching the condensate trap to the condensate hose from the heat exchanger. Remove the clear plastic hose from the hose barb. Remove the condensate hose clamp to detach the condensate trap from the drain tube. Remove the condensate trap from the appliance.

3. Remove the bottom cap from the condensate trap.

4. Flush trap with fresh water to remove debris from the trap.

NOTE: Ensure the float moves freely within the trap. If the float does not move, DO NOT reinstall the trap.

5. When the condensate trap is sufficiently clean, reinstall the bottom cap on the trap.

NOTE: Ensure all parts shown in Figure 57, Condensate Detail, are installed with the condensate trap. If any parts are missing, DO NOT reinstall the trap. Replace the entire assembly.

⚠ WARNING

Do not install the condensate assembly if a component is lost or missing. Replace the entire assembly. Failure to follow this warning could result in property damage, serious personal injury, or death.

6. Fill the condensate trap with fresh water prior to reassembly on the appliance.

7. Install the condensate trap on the condensate hose from the heat exchanger. Use the hose clamp to secure the trap. Attach the clear plastic hose onto the hose barb. Reinstall the condensate hose clamp to detach the condensate trap from the drain tube.

⚠ WARNING

Do not operate the appliance without the clear hose attached from the hose barb to the pressure switch. Failure to follow this warning could result in property damage, serious personal injury, or death.

8. If a condensate neutralizer kit is installed with the appliance, check the assembly when cleaning the condensate trap, and replenish the limestone chips if necessary. When replacing the limestone chips, take care to ensure chips are no smaller than ½" to avoid blockage in condensate piping (for piping details, refer to condensate neutralizer installation instruction.)

9. Check condensate piping for sagging and/or leakage. Repair any sags or leaks before restoring power to the appliance.

CAUTION

It is very important that the condensate piping be no smaller than ¾". To prevent sagging and maintain pitch, condensate piping should be supported with pipe supports, and pitched ¼" per foot to allow for proper drainage.

CAUTION

The condensate line must remain unobstructed, allowing free flow of condensate. If condensate freezes in the line, or if line is obstructed in any other manner, condensate can exit from the tee, resulting in potential water damage to property.

10. If the appliance has a condensate pump, ensure the pump operates properly before considering maintenance complete.

REPLACEMENT PARTS

NUMBER	DESCRIPTION	PART NUMBER	NUMBER	DESCRIPTION	PART NUMBER
B-1	M3 X 6 PH + MS	7855P-384	B-10	M4 X 12 TH + M/S	7855P-393
B-2	M4 X 8 PH + Self Tapping	7855P-385	B-11	M4 X 14 PH + Self Tapping	7855P-394
B-3	M4 X 8 TH + Self Tapping	7855P-386	B-12	M4 X 15 PW + M/S	7855P-395
B-4	M4 X 8 TH + MS	7855P-387	B-13	M4 X 20 TH + Self Tapping	7855P-396
B-5	M4 X 10 FH + M/S	7855P-388	B-14	M5 X 14 Flange Bolts M/S	7855P-397
B-6	M4 X 10 TH + Self Tapping	7855P-389	B-15	M5 X 10 TH+ M/S	7855P-453
B-7	M4 X 10 TH + M/S	7855P-390	B-16	M4 X 9 PH.PW + Self Tapping	7855P-296
B-8	M4 X 10 Flat Head	7855P-391	N-1	M4 Nut	7855P-398
B-9	M4 X 12 PH + M/S	7855P-392	N-2	M5 Nut	7855P-399

Table 33 – Replacement Bolts and Nuts

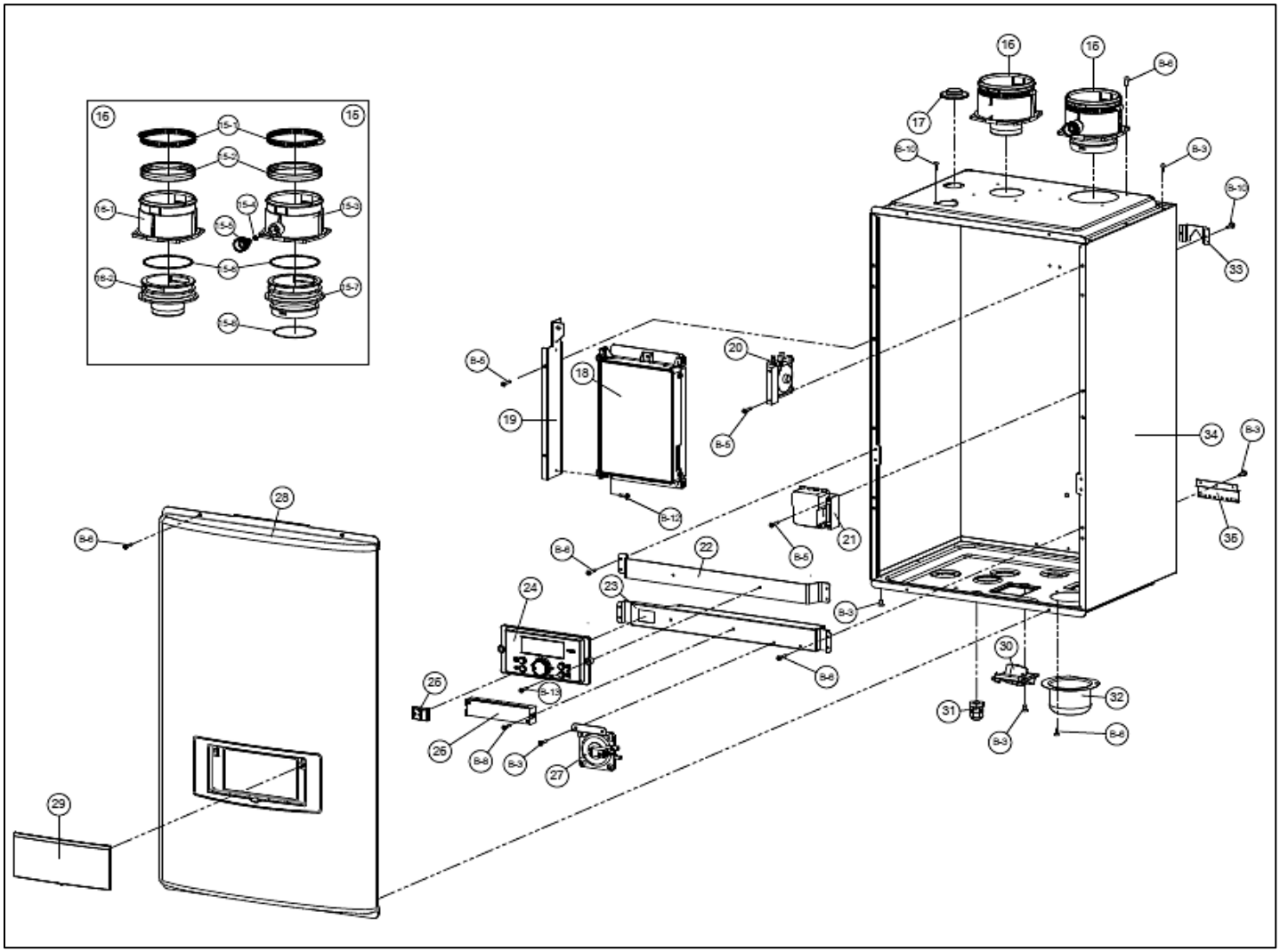

Figure 58 – Cabinet Replacement Parts – 140W Models

NUMBER	DESCRIPTION	PART NUMBER	NUMBER	DESCRIPTION	PART NUMBER
15	Exhaust Duct (Assembly)	7855P-002	21	Ignition Transformer	7855P-007
15-1	Exhaust/Intake Duct Clamps (Φ100)	7855P-332	22	Control Panel Bracket	7855P-219
15-2	Exhaust/Intake Gaskets	7850P-210	23	Power Switch Bracket	7855P-220
15-3	Exhaust Duct	7855P-333	24	Display Panel	7855P-012
15-4	Combustion Analyzer port Plug O-ring	7855P-334	25	Manual Power Switch	7855P-014
15-5	Combustion Analyzer port Plug	7855P-335	26	Terminal Block	7855P-015
15-6	Intake/Exhaust Adapter O-Ring (85 Φ)	7855P-256	27	Condensate Block APS	7855P-017
15-7	Exhaust Duct Inner Adapter	7855P-004	28	Front Cover	7855P-218
15-8	Exhaust Adapter O-Ring (75 Φ)	7855P-254	29	Display Panel Cover	7850P-023
16	Air Intake Cap (assembly)	7855P-003	30	CH Pressure Gauge	7855P-135
16-1	Air Intake Cap	7855P-337	31	Wire Gland	7855P-348
16-2	Air Intake Inner Adapter	7855P-338	32	Condensate Trap Cup	7855P-331
17	Air Vent Grommet	7855P-339	33	Top Wall Mount Bracket	7850P-068
18	Universal Control Board FT	7855P-217	34	Cabinet	7855P-226
19	Control Panel Bracket	7855P-219	35	Bottom Wall Mount Bracket	7850P-092
20	Air Pressure Switch	7855P-262			

Table 34 – Cabinet Replacement Parts – 140W Models

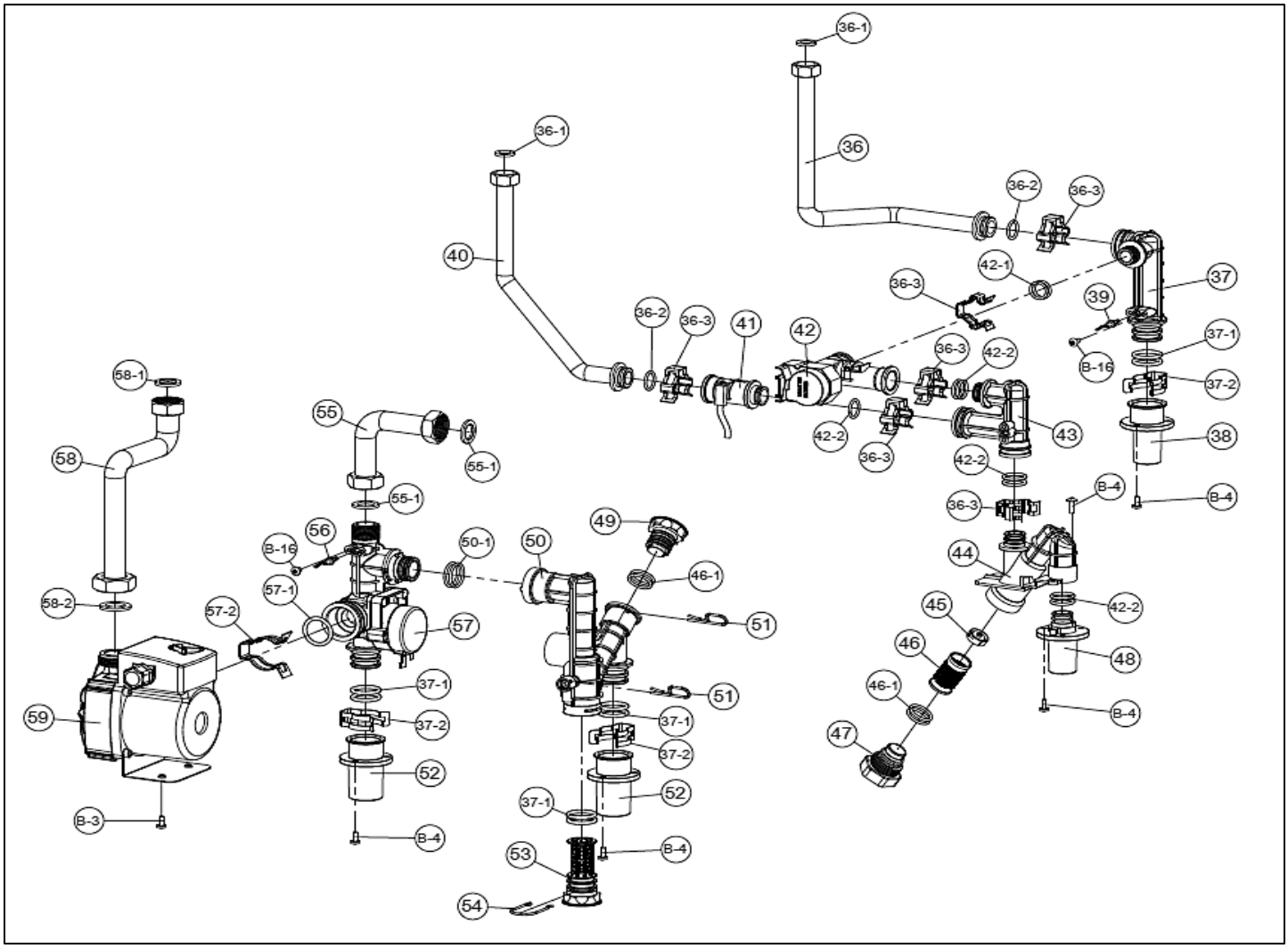

Figure 59 – Water Piping Replacement Parts – 140W Models

NUMBER	DESCRIPTION	PART NUMBER	NUMBER	DESCRIPTION	PART NUMBER
36	DHW Outlet Pipe	7855P-242	47	DHW Inlet Block Cap	7855P-283
36-1	1/2" Pipe Gasket	7855P-072	48	DHW Inlet Adapter	7855P-203
36-2	O-ring	7855P-044	49	DHW Inlet Block Cap	7855P-283
36-3	Clip (DHW Inlet)	7855P-246	50	CH Return Block With Filter	7855P-248
37	DHW Inner Block	7855P-251	50-1	P22 O-ring	7855P-276
37-1	O-ring P22A	7850P-262	51	CH Return Block With Filter Clips	7855P-284
37-2	Pipe Adapter Clip	7855P-278	52	CH Return Adapter	7855P-227
38	DHW Outlet Adapter	7855P-225	53	Filter for CH Return Block	7855P-265
39	DHW Temperature Sensor	7855P-094	54	CH Filter Clip	7855P-286
40	DHW Inlet Pipe	7855P-241	55	CH Return Pipe	7855P-243
41	DHW Flow Sensor	7855P-083	55-1	3/4" Pipe Gasket	7855P-073
42	Mixing Valve	7855P-043	56	CH Return Temperature Sensor	7855P-097
42-1	P15 O-ring	7855P-044	57	3 Way Valve Assembly	7855P-247
42-2	P16 O-ring	7855P-075	57-1	P22A O-ring	7850P-262
43	DHW Outer Block	7855P-259	57-2	Pump clip	7855P-263
44	DHW Inlet Filter Block	7855P-257	58	CH Supply Lower Pipe	7855P-244
45	Flow Restrictor (15L)	7855P-261	58-1	3/4" Pipe Gasket	7855P-073
46	DHW Inlet Filter	7855P-281	58-2	1" Pipe Gasket	7855P-074
46-1	P20 O-ring	7855P-282	59	Internal Pump	7855P-245

Table 35 – Water Piping Replacement Parts – 140W Models

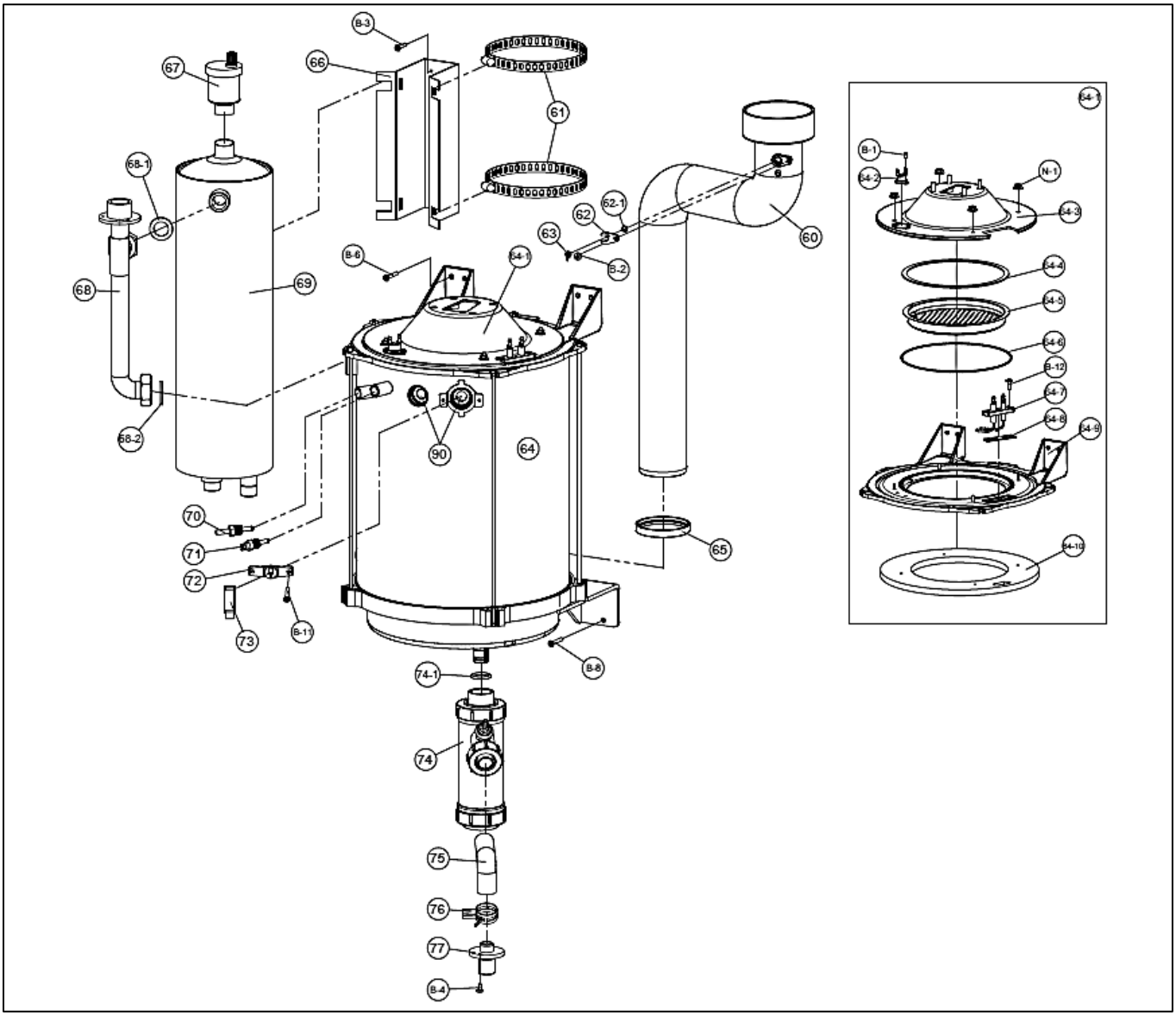

Figure 60 – Heat Exchanger Replacement Parts – 140W Models

NUMBER	DESCRIPTION	PART NUMBER	NUMBER	DESCRIPTION	PART NUMBER
60	Exhaust Pipe	7855P-237	66	Storage Tank Bracket	7855P-298
61	Storage Tank Clamp	7855P-297	67	Air Vent	7855P-063
62	Exhaust Temperature Sensor Clip	7855P-349	68	CH Supply Upper Pipe	7855P-471
62-1	Exhaust Temperature Sensor O-ring	7855P-092	68-1	3/4" CH Supply Pipe Gasket	7855P-073
63	Exhaust Temperature Sensor	7855P-092	68-2	1" CH Supply Pipe Gasket	7855P-074
64	Heat Exchanger Assembly	7855P-353	69	Internal DHW Storage Tank	7855P-240
64-1	Burner Body Assembly	7855P-354	70	CH Supply Temperature Sensor	7855P-030
64-2	Burner Overheat Switch	7855P-066	71	Water Level Detection Sensor (Low water Cutoff)	7855P-029
64-3	Burner Body	7855P-067	72	Flame sensor bracket	7855P-356
64-4	Burner Gasket	7855P-266	73	Flame sensor	7855P-031
64-5	Ceramic Fiber Burner	7855P-069	74	Condensate Trap Assembly	7855P-053
64-6	Burner plate O-Ring	7855P-249	74-1	Burner Body Assembly	7855P-354
64-7	Ignition Rod	7855P-068	75	Condensate Trap drain hose	7855P-255
64-8	Igniter Gasket	7855P-252	76	Condensate trap clamp (Φ23)	7855P-366
64-9	Heat Exchanger Top	7855P-355	77	Condensate Outlet Adapter	7855P-224
64-10	Burner Refractory	7855P-253	90	Sight Glass Assembly	7855P-401
65	Exhaust pipe Gasket	7855P-351			

Table 36 – Heat Exchanger Replacement Parts – 140W Models

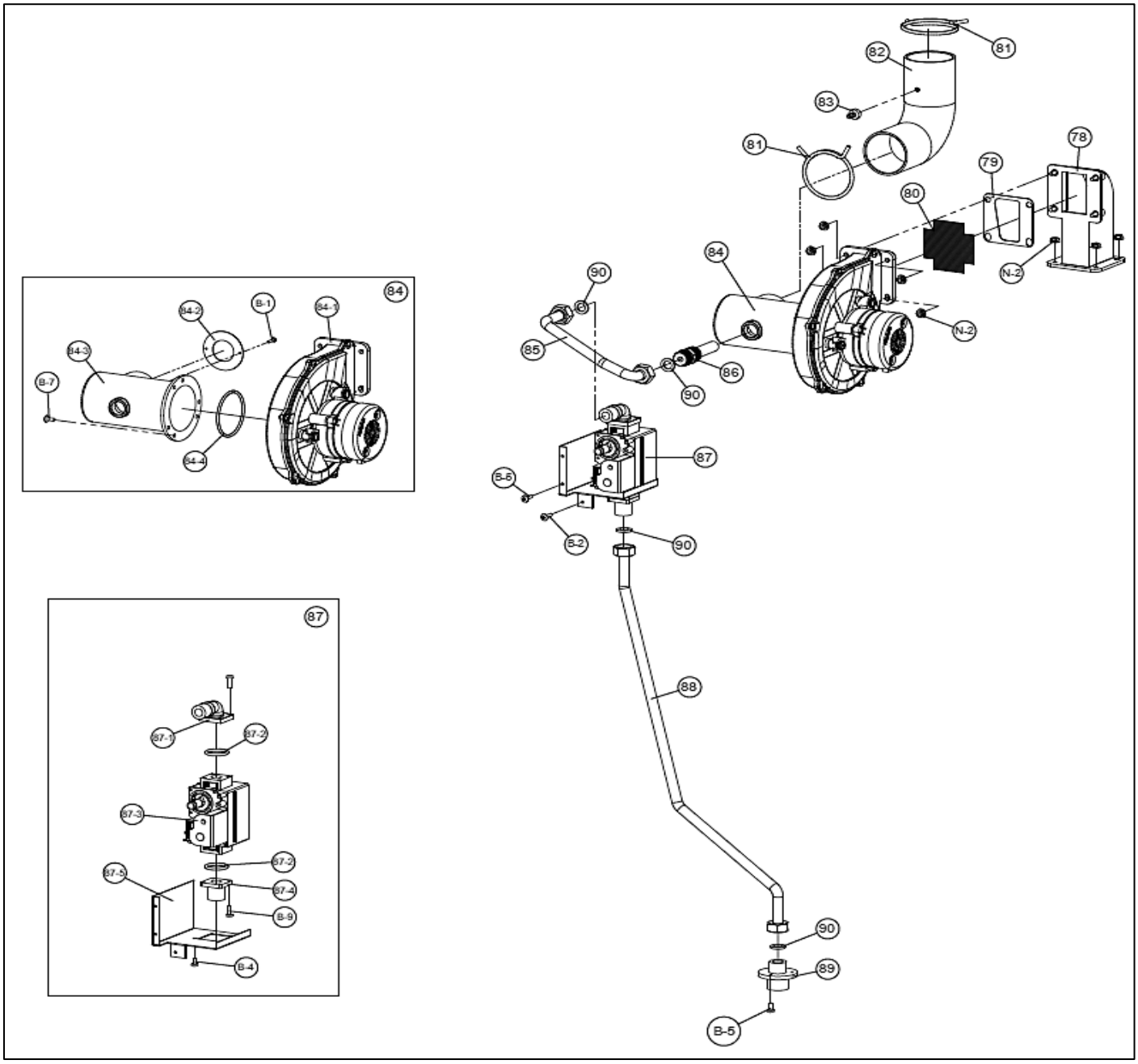

Figure 61 – Combustion System Replacement Parts – 140W Models

NUMBER	DESCRIPTION	PART NUMBER	NUMBER	DESCRIPTION	PART NUMBER
78	Burner Inlet Chanel	7855P-231	86	Gas Orifice Nozzle (NG) - 6.5 mm	7855P-228
				Gas Orifice Nozzle (LP) - 4.85 mm	7855P-229
79	Burner Inlet Chanel Gasket	7855P-370	87	Gas Valve Assembly	7855P-381
80	Fan Outlet Mesh	7855P-299	87-1	Gas Valve Outlet Adapter	7855P-232
81	Air Intake hose top clamp (Φ60)	7855P-372	87-2	Gas Valve O-ring	7855P-076
82	Air Intake Hose	7855P-071	87-3	Gas valve	7855P-034
83	APS Hose Fitting	7855P-375	87-4	Gas valve inlet adapter	7855P-033
84	Fan Assembly	7855P-457	87-5	Gas Valve Bracket	7855P-234
84-1	Fan	7855P-025	88	Gas Inlet Pipe	7855P-235
84-2	Air intake Chanel Orifice	7855P-458	89	Gas Inlet Adapter (1/2")	7855P-223
84-3	Air Gas Mixer	7855P-027	90	½” Gas Pipe Gasket	7855P-221
84-4	Fan O-ring	7855P-371			
85	Gas Outlet Pipe	7855P-233			

Table 37 – Combustion System Replacement Parts – 140W Models

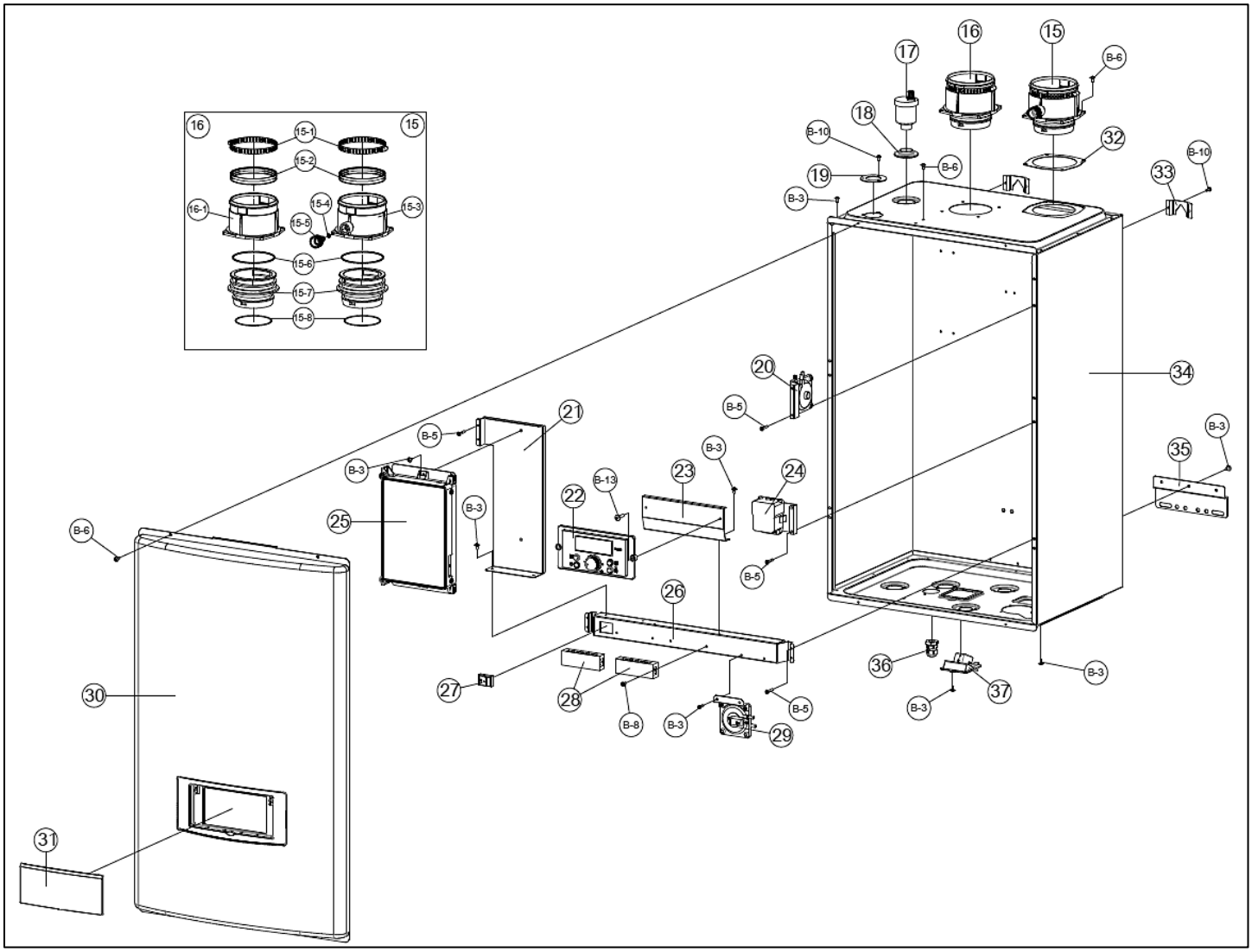

Figure 62 – Cabinet Replacement Parts – 199W Models

NUMBER	DESCRIPTION	PART NUMBER	NUMBER	DESCRIPTION	PART NUMBER
15	Exhaust Duct Assy	7855P-002	22	Display Panel	7855P-012
15-1	Exhaust / Intake Duct Clamps	7855P-332	23	Display Panel Bracket	7855P-413
15-2	Exhaust / Intake Gaskets	7850P-210	24	Ignition Transformer	7855P-007
15-3	Exhaust Duct	7855P-333	25	Universal Control Board FT	7855P-268
15-4	Combustion Analyzer Port Plug O-Ring	7855P-334	26	Terminal Block Bracket	7855P-271
15-5	Combustion Analyzer Port Plug	7855P-335	27	Manual Power Switch	7855P-014
15-6	Intake / Exhaust Adapter O-Ring	7855P-256	28	Terminal Block 6P – Combi	7855P-272
15-7	Exhaust Duct Inner Adapter	7855P-004	29	Condensate Block APS	7855P-017
15-8	Exhaust Adapter O-Ring	7855P-254	30	Front Cover	7855P-289
16	Air Intake Assy	7855P-411	31	Display Panel Cover	7850P-023
16-1	Air Intake Cap	7855P-337	32	Exhaust Adapter Gasket	7850P-041
17	Air Vent	7855P-063	33	Top Wall Mount Bracket	7850P-068
18	Air Vent Grommet	7855P-339	34	Cabinet	7855P-274
19	PRV Ring	7855P-269	35	Bottom Wall Mount Bracket	7850P-092
19-1	PRV Rubber Pad	7855P-339	36	Wire Gland	7855P-348
20	Air Pressure Switch	7855P-262	37	CH Pressure Gauge	7855P-135
21	Control Board Bracket	7855P-412			

Table 38 – Cabinet Replacement Parts – 199W Models

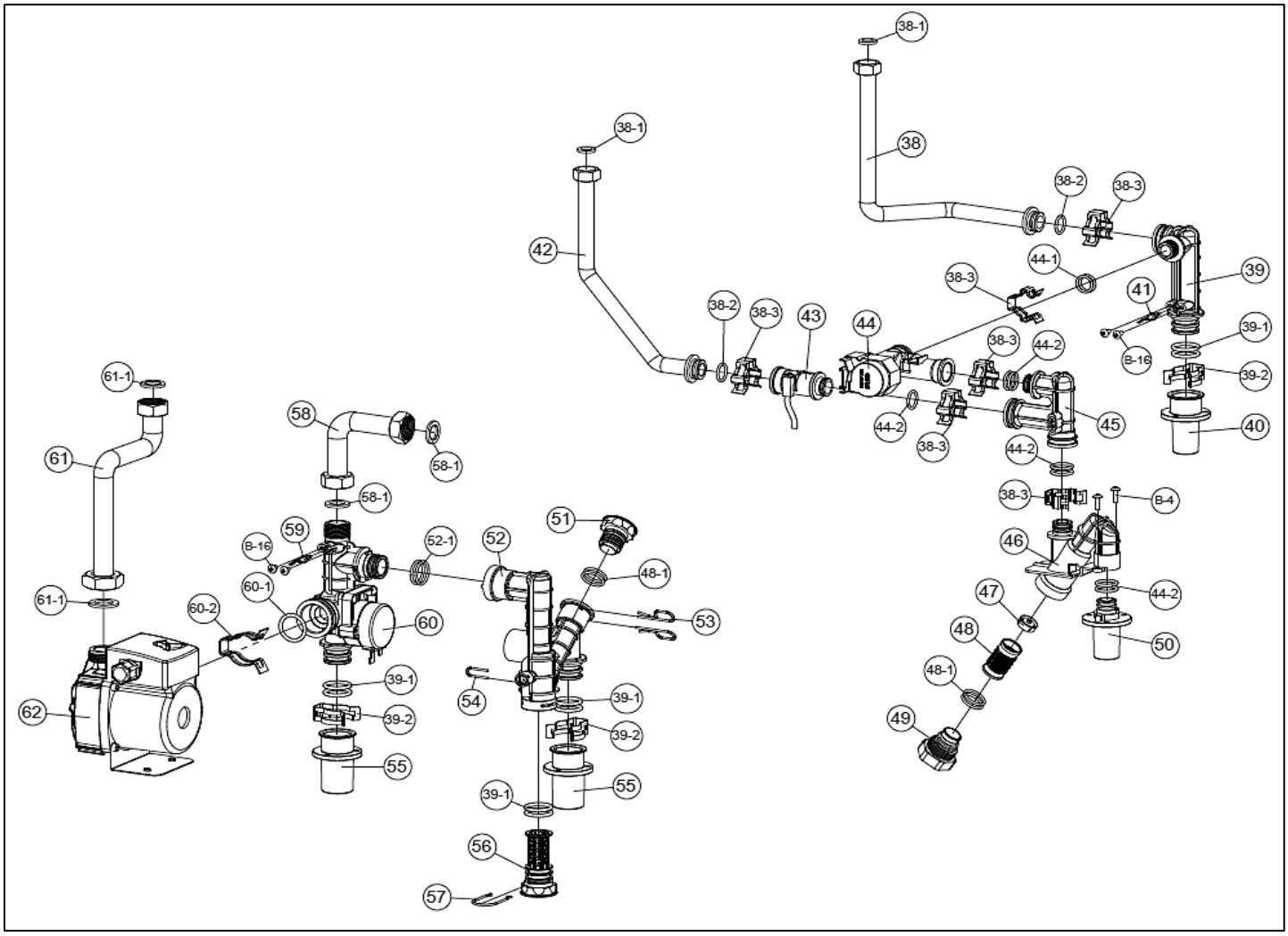

Figure 63 – Water Piping Replacement Parts – 199W Models

NUMBER	DESCRIPTION	PART NUMBER	NUMBER	DESCRIPTION	PART NUMBER
38	DHW Outlet Pipe	7855P-275	49	DHW Inlet Block Cap	7855P-283
38-1	¾" Pipe Gasket	7855P-073	50	DHW Inlet Adapter	7855P-203
38-2	P-18 O-Ring	7855P-047	51	CH Block Cap	7855P-283
38-3	½" Pipe Clip	7855P-246	52	CH Return Block With Filter	7855P-248
39	DHW Inner Block	7855P-251	52-2	P22 O-Ring	7855P-276
39-1	P22A O-Ring	7855P-276	53	CH Return Block With Filter Clips	7855P-284
39-2	Pipe Adapter Clip	7855P-277	54	Pressure Gauge Clip	7855P-285
40	DHW Outlet Adapter	7855P-225	55	CH Return Adapter	7855P-227
41	DHW Temperature Sensor	7855P-094	56	Filter for CH Return Block	7855P-265
42	DHW Inlet Pipe	7865P-031	57	CH Filter Clip	7855P-286
43	DHW Flow Sensor	7855P-083	58	CH Return Pipe	7855P-287
44	Mixing Valve	7855P-043	58-1	3/4" Pipe Gasket	7855P-073
44-1	Flow Sensor Clip	7855P-278	59	CH Return Temperature Sensor	7855P-097
44-2	P15 O-Ring	7855P-044	60	3 Way Valve Assembly	7855P-247
45	DHW Outer Block	7855P-259	60-1	P25 O-Ring	7855P-288
46	DHW Inlet Filter Block	7855P-279	60-2	Pump Clips	7855P-263
47	Flow Restrictor	7855P-280	61	CH Supply Lower Pipe	7855P-290
48	DHW Inlet Filter	7855P-281	61-1	3/4" Pipe Gasket	7855P-073
48-1	P20 O-Ring	7855P-282	62	Internal Grundfos Pump / DHW Storage Pump	7855P-456

Table 39 – Water Piping Replacement Parts – 199W Models

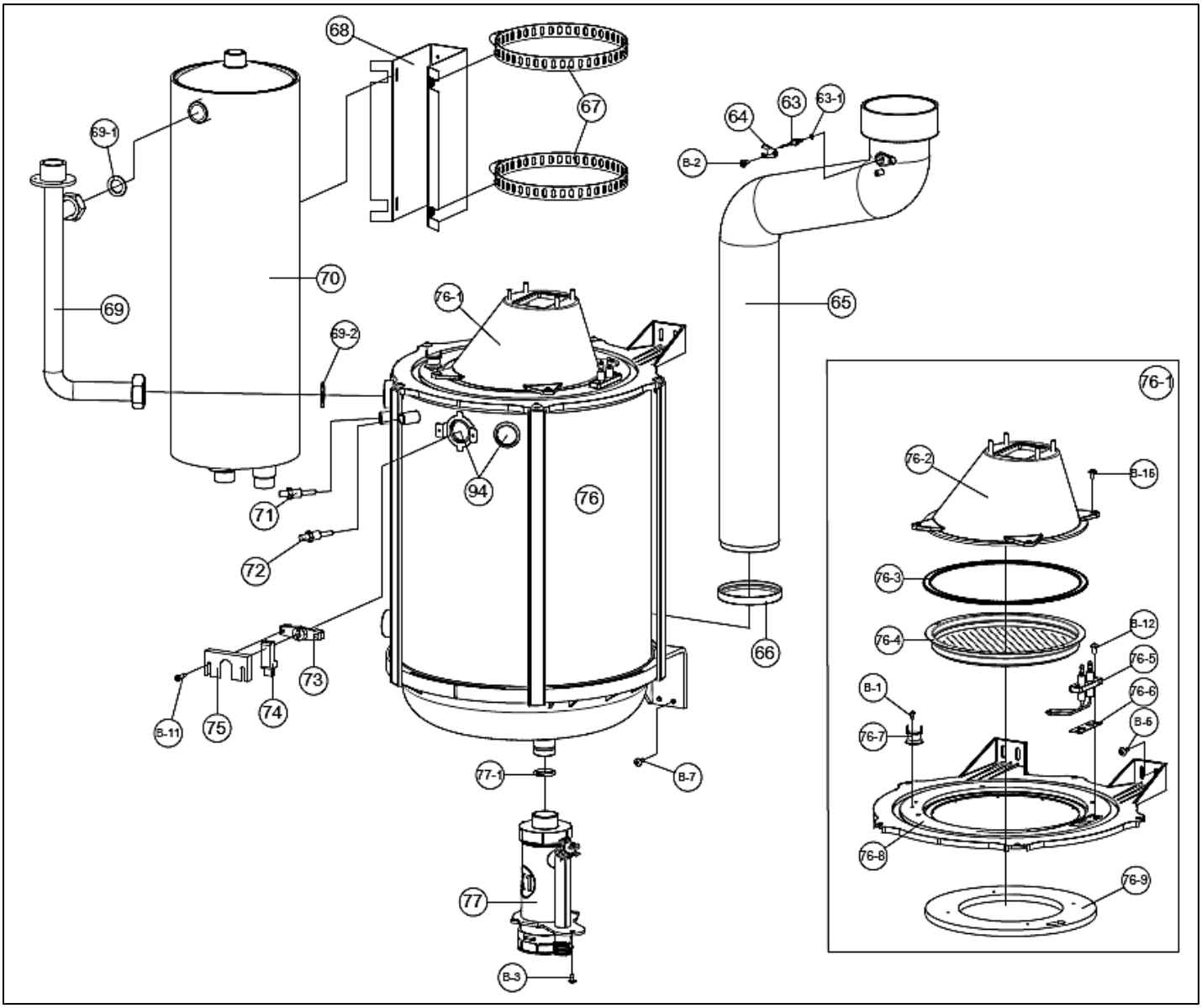

Figure 64 – Heat Exchanger Replacement Parts – 199W Models

NUMBER	DESCRIPTION	PART NUMBER	NUMBER	DESCRIPTION	PART NUMBER
63	Exhaust Temperature Sensor	7855P-092	75	Flame Sensor Cover	7855P-357
63-1	Exhaust Temperature Sensor O-Ring	7855P-092	76	Heat Exchanger Assembly	7855P-416
64	Exhaust Temperature Sensor Clip	7855P-349	76-1	Burner Body Assembly	7855P-417
65	Exhaust Pipe Assembly	7855P-415	76-2	Burner Body	7855P-606
66	Exhaust Pipe Gasket	7855P-418	76-3	Burner Gasket	7855P-419
67	Storage Tank Clamp	7855P-291	76-4	Ceramic Fiber Burner	7855P-420
68	Storage Tank Bracket	7855P-292	76-5	Ignition Rod	7855P-607
69	CH Supply Pipe	7855P-293	76-6	Igniter Gasket	7855P-252
69-1	3/4" CH Supply Pipe Gasket	7855P-073	76-7	Burner Overheat Switch	7855P-066
69-2	1" CH Supply Pipe Gasket	7855P-074	76-8	Heat Exchanger Top	7855P-619
70	Storage Tank	7855P-294	76-9	Burner Refractory	7855P-612
71	CH Supply Temperature Sensor	7855P-030	77	Condensate Trap Assembly	7855P-605
72	Water Level Detection Sensor (Low Water Cutoff)	7855P-029	77-1	Condensate Trap O-Ring (P22A)	7855P-276
73	Flame Sensor Bracket	7855P-356	94	Sight Glass Assembly	7855P-401
74	Flame Sensor	7855P-031			

Table 40 – Heat Exchanger Replacement Parts – 199W Models

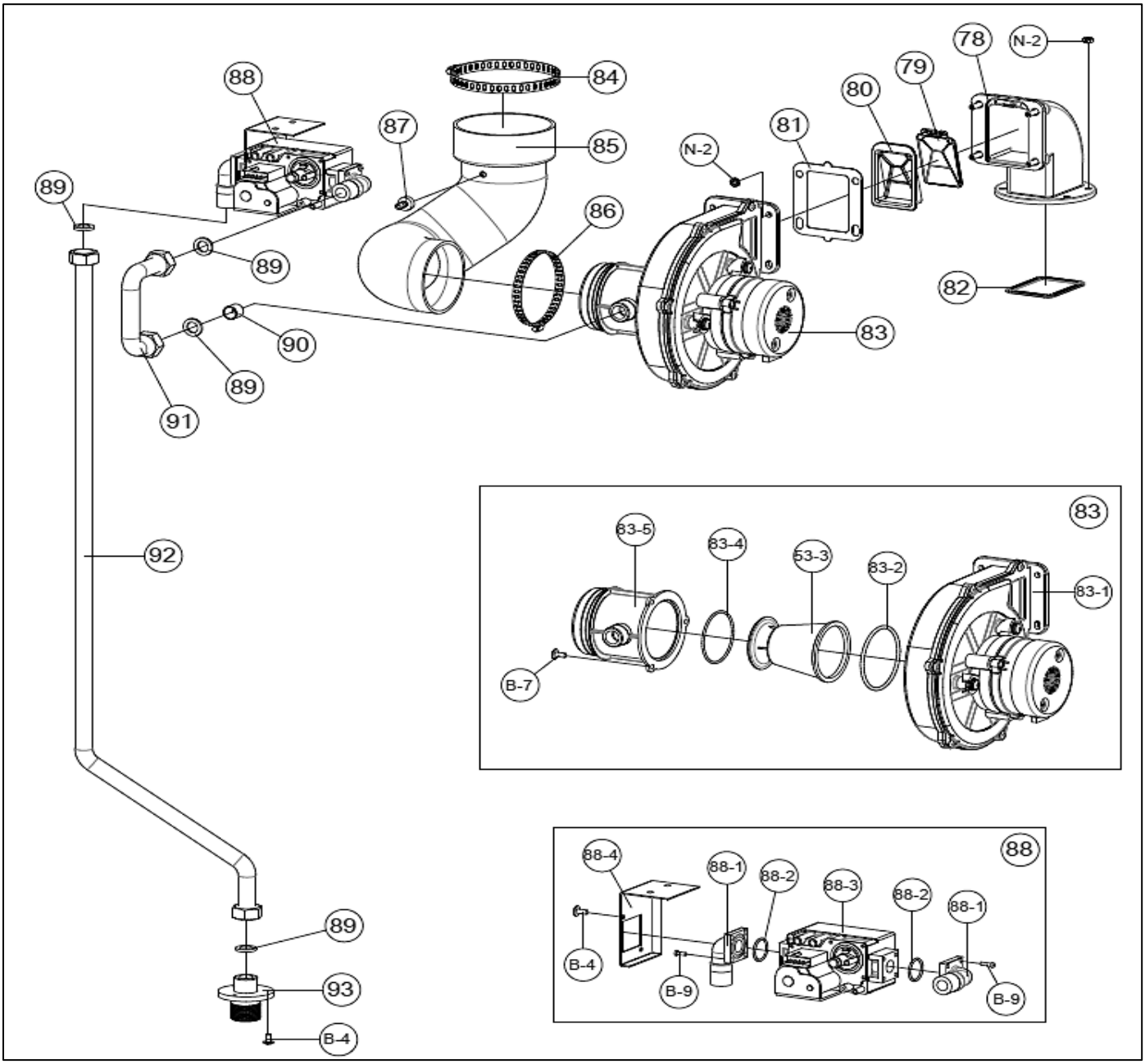

Figure 65 – Combustion System Replacement Parts – 199W Models

NUMBER	DESCRIPTION	PART NUMBER	NUMBER	DESCRIPTION	PART NUMBER
78	Burner Inlet Chanel (with Damper)	7855P-424	86	Air Intake Hose Bottom Clamp	7855P-429
79	Air Damper	7855P-618	87	APS Hose Fitting	7855P-375
80	Air Damper Guide	7855P-369	88	Gas Valve Assembly	7855P-431
81	Fan Outlet Gasket	7855P-425	88-1	Gas Valve Outlet Adapter	7855P-232
82	Burner Inlet Chanel Gasket	7855P-426	88-2	Gas Valve O-Ring	7855P-076
83	Fan and Mixer Assembly	7855P-427	88-3	Gas Valve	7855P-034
83-1	Fan	7855P-025	88-4	Gas Valve Bracket	7855P-436
83-2	Fan O-Ring	7855P-371	89	1/2" Gas Pipe Gasket	7855P-221
83-3	Air-Gas Mixer (Inner Part)	7855P-609	90	Gas Orifice (NG) 8.3 mm	7855P-610
83-4	Air-Gas Mixer Gasket	7855P-428		Gas Orifice (LP) 6.3 mm	7855P-435
83-5	Air-Gas Mixer (Outer Part)	7855P-608	91	Gas Pipe (to Mixer)	7855P-432
84	Air Intake Hose Top Clamp	7855P-429	92	Gas Pipe (to Gas Valve)	7855P-295
85	Air Intake Hose	7855P-430	93	Gas Inlet Adapter ¾”	7855P-382

Table 41 – Combustion System Replacement Parts – 199W Models

Limited Warranty for EFTC Appliances
(Floor and Wall Mounted Models)

HTP warrants each instantaneous appliance and its parts to be free from defects in materials and workmanship according to the following terms, conditions, and time periods. **UNLESS OTHERWISE NOTED THESE WARRANTIES COMMENCE ON THE DATE OF INSTALLATION.** This limited warranty is only available to the **original owner** of this appliance, and is non-transferable.

Residential Use Warranty	Commercial Use Warranty
10 years – Heat Exchanger, 5 years – Parts	**5 years – Heat Exchanger, 1 Year – Parts**
USE DEFINTIONS - Residential Use means heating in a single family dwelling. This dwelling must be either: a) owned and resided in by the original purchaser; or b) a residential rental property that services a single dwelling in which the original purchaser resides on a permanent basis. Commercial Use refers to all other applications.	

COVERAGE

A. During the first year after the original date of installation, HTP warrants that it will repair or replace, at its option, any defective or malfunctioning component of the appliance with a component of equivalent size and current model. Replacement components will be warranted for ninety (90) days.
B. Should a defect or malfunction result in a leakage of water within the above-stated warranty periods due to defective material or workmanship, malfunction, or failure to comply with the above warranty, HTP will replace the defective or malfunctioning appliance with a replacement of the nearest comparable model available at the time of replacement. The replacement appliance will be warranted for the unexpired portion of the applicable warranty period of the original appliance.
C. In the event of a leakage of water of a replacement appliance due to defective material or workmanship, malfunction, or failure to comply with the above warranty, HTP reserves the right to refund to the original purchaser the published wholesale price available at the date of manufacture of the original appliance.
D. If government regulations, industry certification, or similar standards require the replacement appliance or part(s) to have features not found in the defective appliance or part(s), the owner will be charged the difference in price represented by those required features. If the owner pays the price difference for those required features and/or to upgrade the size and/or other features available on a new replacement appliance or part(s), the owner will also receive a complete new limited warranty for that replacement appliance or part(s).
E. If at the time of a request for service the owner cannot provide a copy of the original sales receipt or the warranty registration, the warranty period for the appliance shall then be deemed to have commenced thirty (30) days after the date of manufacture of the appliance and **NOT** the date of installation of the appliance.
F. This warranty extends only to appliances utilized in heating applications that have been properly installed by qualified professionals based upon the manufacturer's installation instructions.
G. It is expressly agreed between HTP and the original consumer purchaser that repair, replacement, or refund are the exclusive remedies of the original consumer purchaser.

OWNER RESPONSIBILITIES

To avoid the exclusion list in this warranty, the owner or installer must:
1. Maintain the appliance in accordance with the maintenance procedure listed in the manufacturer's provided instructions. Preventive maintenance can help avoid any unnecessary breakdown of your appliance and keep it running at optimum efficiency.
2. Maintain all related system components in good operating condition.
3. If the cold water supply line has a backflow preventer, then an expansion tank should be installed to allow for water expansion.
4. Use the appliance at water pressures not exceeding the working pressure shown on the rating plate.

WARRANTY EXCLUSIONS

This limited warranty will not cover:
1. Any appliance purchased from an unauthorized dealer or online retailer.
2. Any appliance not installed by a qualified heating installer/service technician, or installations that do not conform to ANSI, CSA, and/or ETL standards, as well as any applicable national or local building codes.
3. Service trips to teach you how to install, use, maintain, or to bring the appliance installation into compliance with local building codes and regulations.
4. Failure to locate the appliance in an area where leakage of the tank or water line connections and the combination temperature and relief valve will not result in damage to the area adjacent to the appliance or lower floors of the structure.
5. Any failed components of the heat system not manufactured by HTP as part of the appliance.
6. Appliances repaired or altered without the prior written approval of HTP.
7. Damages, malfunctions, or failures resulting from failure to install the appliance in accordance with applicable building codes/ordinances or good plumbing and electrical trade practices.
8. Damages, malfunctions, or failures resulting from improper installation, failure to operate the appliance at pressures not exceeding the working pressure shown on the rating plate, or failure to operate and maintain the appliance in accordance with the manufacturer's provided instructions.
9. Failure to operate the appliance in an open system with a properly sized and installed thermal expansion tank.
10. Failure or performance problems caused by improper sizing of the appliance, expansion device, piping, or the gas supply line, the venting connection, combustion air openings, electric service voltage, wiring or fusing.
11. Damages, malfunctions, or failures caused by improper conversion from natural gas to LP gas or LP gas to natural gas.

12. Damages, malfunctions, or failures caused by operating the appliance with modified, altered, or unapproved parts.
13. Damages, malfunctions, or failures caused by abuse, accident, fire, flood, freeze, lightning, acts of God and the like.
14. Tank failures (leaks) caused by operating the appliance in a corrosive or contaminated atmosphere.
15. Damages, malfunctions, or failures caused by operating the appliance with an empty or partially empty tank ("dry firing"), or failures caused by operating the appliance when it is not supplied with potable water, free to circulate at all times.
16. Failure of the appliance due to the accumulation of solid materials and lime deposits.
17. Any damage or failure resulting from improper water chemistry, or heating anything other than potable water. DEFINITION OF POTABLE WATER - Potable water is defined as drinkable water supplied from utility or well water in compliance with EPA secondary maximum contaminant levels (40 CFR Part 143.3) as shown in the table.
18. Components of the appliance that are not defective, but must be replaced during the warranty period as a result of reasonable wear and tear.
19. Damages, malfunctions, or failures caused by subjecting the appliance to pressures or firing rates greater than those shown on the rating label.
20. Damages, malfunctions, or failures resulting from the use of any attachment(s) not supplied by HTP.
21. Appliances moved from the original installation location.
22. Appliances that have had their rating labels removed.

EPA DEFINITION OF POTABLE WATER	
Contaminant	**Level**
Total Hardness (Residential Use - Below 140ºF water temperature)	200 mg/l (12 grains/gallon)
Total Hardness (Commercial Use - 140ºF and above water temperature)	120 mg/l (7 grains/gallon)
Aluminum	0.05 to 0.2 mg/l
Chloride	100 mg/l
Color	15 color units
Copper	1.0 mg/l
Corrosivity	Non-corrosive
Fluoride	2.0 mg/l
Foaming Agents	0.5 mg/l
Iron	0.3 mg/l
Manganese	0.05 mg/l
Odor	3 threshold odor number
pH	6.5 – 8.5
Silver	0.1 mg/l
Sulfate	250 mg/l
Total Dissolved Solids (TDS)	500 mg/l
Zinc	5 mg/l
Dissolved Carbon Dioxide (CO2)	15 mg/l or ppm

PROCEDURES FOR WARRANTY SERVICE REQUESTS

Any claim for warranty assistance must be made promptly. Determine if the appliance is "in-warranty" (that is, within the applicable warranty period) by reviewing a copy of the original sales receipt or warranty registration. The owner must present a copy of the original sales receipt or warranty registration for a warranty service request.

If the appliance is "in-warranty", contact the distributor from whom the appliance was purchased (or the installer) for assistance. Be prepared to provide the retailer or installer with a copy of the original receipt, complete model and serial numbers, and the date of installation of the appliance, in addition to explanation of the appliance problem.

Warranty coverage is subject to validation of "in-warranty" coverage by HTP claims department personnel. All alleged defective or malfunctioning parts must be returned to HTP via the **local distribution channels** where original purchase was made. **NOTE: Any parts or appliances returned to HTP for warranty analysis will become the property of HTP and will not be returned, even if credit is denied.** If all warranty conditions are satisfied, HTP will provide replacement parts to the retailer.

For questions about the coverage of this warranty, please contact HTP at the following address or phone number: HTP, 272 Duchaine Blvd., New Bedford, MA, 02745, Attention: Warranty Service Department, 1(800) 323-9651.

SERVICE, LABOR AND SHIPPING COSTS

This limited warranty does not extend to any shipping charges, delivery expenses, or administrative fees incurred by the owner in repairing or replacing the appliance or part(s). This warranty does not extend to labor costs beyond the coverage specified in this warranty document. All such expenses are the owner's responsibility.

LIMITATIONS OF YOUR HTP WARRANTY AND REMEDIES

THE FOREGOING WARRANTIES ARE EXCLUSIVE AND ARE GIVEN AND ACCEPTED IN LIEU OF ANY AND ALL OTHER WARRANTIES, EXPRESS OR IMPLIED, INCLUDING WITHOUT LIMITATION THE IMPLIED WARRANTIES OF MERCHANTABILITY AND FITNESS FOR A PARTICULAR PURPOSE AND ANY OBLIGATION, LIABILITY, RIGHT, CLAIM OR REMEDY IN CONTRACT OR TORT, WHETHER OR NOT ARISING FROM HTP'S NEGLIGENCE, ACTUAL OR IMPUTED. THE REMEDIES OF THE PURCHASER SHALL BE LIMITED TO THOSE PROVIDED HEREIN TO THE EXCLUSION OF ANY OTHER REMEDIES INCLUDING WITHOUT LIMITATION, INCIDENTAL OR CONSEQUENTIAL DAMAGES, SAID INCIDENTAL AND CONSEQUENTIAL DAMAGES INCLUDING, BUT NOT LIMITED TO, PROPERTY DAMAGE, LOST PROFIT OR DAMAGES ALLEGED TO HAVE BEEN CAUSED BY ANY FAILURE OF HTP TO MEET ANY OBLIGATION UNDER THIS AGREEMENT INCLUDING THE OBLIGATION TO REPAIR AND REPLACE SET FORTH ABOVE. NO AGREEMENT VARYING OR EXTENDING THE FOREGOING WARRANTIES, REMEDIES OR THIS LIMITATION WILL BE BINDING UPON HTP. UNLESS IN WRITING AND SIGNED BY A DULY AUTHORIZED OFFICER OF HTP. THE WARRANTIES STATED HEREIN ARE NOT TRANSFERABLE AND SHALL BE FOR THE BENEFIT OF THE ORIGINAL PURCHASER ONLY.

NO OTHER WARRANTIES

This HTP Warranty gives you specific legal rights, and you may also have other rights that vary from state to state. Some states do not allow the exclusion or limitation of incidental or consequential damages so this limitation or exclusion may not apply to you.

These are the only written warranties applicable to the commercial appliance manufactured and sold by HTP. HTP neither assumes nor authorizes anyone to assume for it any other obligation or liability in connection with said commercial appliances. HTP reserves the right to change specifications or discontinue models without notice.

START-UP REPORT

LIGHT OFF ACTIVITIES		**DATE COMPLETED** _____			
		Yes	No		
1) Fill the heating system	Check all piping and gas connections, verify all are tight				
	Has the system been cleaned and flushed?				
	Has the appliance and the system been purged of all air? Refer to Start-Up Preparation, this manual.				
	Has the auto air purge feature been used / set? Refer to Start-Up Preparation, this manual.				
	Pressurize system (12 – 15 psi) CH	____ PSI			
	Pressurize system domestic HW				
	Add water to prime condensate cup				
	Percentage of glycol in system (0 – 50%)	____ %			
	Verify proper near appliance piping (Primary/Secondary)				
2) Electrical	Have the power and control wiring been connected per the wiring diagram in this manual?				
	Is the supply voltage 120v and polarity correct?				
3) Check gas pipe	Leak test using locally approved methods (consult jurisdictional code book)				
	Has the gas supply line been verified to deliver the required BTU of the appliance?				
	Has a union and shut-off valve (no less than ½") been installed?				
	Does the gas type match the type indicated on the rating plate?				
	Check incoming gas pressure (3.5" to 14" W.C.)	____ in w.c.	Static		
	If necessary, convert the appliance to the proper gas type				
	Locate the stickers in the appropriate locations on the appliance				
	If applicable, have all dip switches been set and verified to match system requirements?				
	Verify combustion settings after gas conversion, Carbon Dioxide	____% CO2	High Fire	____% CO2	Low Fire
	Verify combustion settings after gas conversion, Carbon Monoxide	____ppm CO	High Fire	____ppm CO	Low Fire
	What is the "drop" on light off (No more than 1" W.C.)?	____ in w.c.	Dynamic		
4) Venting	Has the appliance been vented with 3" PVC, CPVC, Polypropylene, or (AL294C) Stainless for Cat IV appliances?				
	Ensure no ABS or PVC Cellular core has been used				
	Is the vent sloped upward toward the terminal at a rate of ¼" per ft. or 2% grade?				
	Have all intake and exhaust joints been properly sealed and tested?				
	Are all vent runs properly supported?				
	Have the termination screens been installed?				
	Is the vent termination a min of 12" above grade or the highest anticipated snow level?				
	Is the total developed vent length including elbows within the stated max vent length restriction?				
5) Condensate piping / tubing	Is the condensate line piped with the approved materials listed in this manual?				
	Does the condensate line have an air inlet at the top/ beginning of the drain? Refer to Install the Condensate Drain, this manual.				
	Has the condensate been piped over to a drain, and checked to be free flowing?				
	If necessary, has a condensate pump and /or a neutralizer been installed?				
FINAL	**SIGNED BY TECHNICIAN**	**DATE**			

Table 42 – Start-Up Report

MAINTENANCE REPORT

CAUTION
In unusually dirty or dusty conditions, care must be taken to keep appliance cabinet door in place at all times. Failure to do so VOIDS WARRANTY!

The appliance requires minimal periodic maintenance under normal conditions. However, in unusually dirty or dusty conditions, periodic vacuuming of the cover to maintain visibility of the display and indicators is recommended.

Periodic maintenance should be performed once a year by a qualified service technician to assure that all the equipment is operating safely and efficiently. The owner should make necessary arrangements with a qualified heating contractor for periodic maintenance of the appliance. Installer must also inform the owner that the lack of proper care and maintenance of the appliance may result in a hazardous condition.

INSPECTION ACTIVITIES		DATE LAST COMPLETED			
PIPING		1st YEAR	2nd YEAR	3rd YEAR	4th YEAR*
Near appliance piping	Check appliance and system piping for any sign of leakage. Leaking pipes could cause property damage. Make sure all piping is properly supported.				
Vent	Check condition of all vent pipes and joints. Ensure all vent piping is properly supported. Check for obstructions exhaust and intake termination points.				
Gas	Check Gas piping, test for leaks and signs of aging. Make sure all pipes are properly supported.				
SYSTEM					
Visual	Do a full visual inspection of all system components.				
Functional	Test all functions of the system (central heating, water heating, safeties)				
Temperatures	Verify safe settings on appliance or Anti-Scald Valve				
Temperatures	Verify programmed temperature settings				
ELECTRICAL					
Connections	Check wire connections. Make sure they are tight.				
Smoke and CO detector	Verify devices are installed and working properly. Change batteries if necessary.				
Circuit Breakers	Check to see that the circuit breaker is clearly labeled. Exercise circuit breaker.				
Switch and Plug	Verify ON/OFF switch and convenience plug are both functional				
CONDENSATE					
Neutralizer	Check condensate neutralizer. Replace if necessary.				
Condensate hose	Disconnect condensate hose. Clean out dirt and re-install. (NOTE: Verify the flow of condensate, making sure that the hose is properly connected during final inspection.)				
GAS					
Pressure	Measure incoming gas pressure (3.5” to 14” W.C.)				
Pressure Drop	Measure drop in pressure on light off (no more than 1” W.C.)				
Check gas pipe for leaks	Check piping for leaks. Verify that all are properly supported.				
COMBUSTION					
CO/CO2 Levels	Check CO and CO2 levels in Exhaust. Record at high and low fire.				
SAFETIES					
ECO (Energy Cut Out)	Check continuity on Flue ECO. Replace if corroded.				
CH AND DHW LOOPS					
	It is recommended to flush the CH and DHW heat exchangers annually if water hardness exceeds 12 grains per gallon (considered extremely hard water). If water hardness falls below 12 grains per gallon it is recommended to flush the heat exchanger every two to three years. In addition, it is recommended to clean the CH and DHW inlet filters annually.				
FINAL INSPECTION					
Check list	Verify that you have completed entire check list. WARNING: FAILURE TO DO SO COULD RESULT IN SERIOUS INJURY OR DEATH.				
Homeowner	Review what you have done with the homeowner.				
TECH SIGN OFF					

Table 43 - *Continue annual maintenance beyond the 4th year as required.

MAINTENANCE NOTES

CUSTOMER INSTALLATION RECORD FORM

The following form should be completed by the installer for you to keep as a record of the installation in case of a warranty claim. After reading the important notes at the bottom of the page, please also sign this document.

Customer's Name:	
Installation Address:	
Date of Installation:	
Installer's Code/Name:	
Product Serial Number(s):	
Combustion Setting at Time of Installation:	
Comments:	
Installer's Phone Number:	
Signed by Installer:	
Signed by Customer:	

IMPORTANT NOTES:

Customer: Please only sign after the installer has reviewed the installation, safety, proper operation and maintenance of the system. In the case that the system has any problems, please call the installer. If you are unable to make contact, please contact your HTP Sales Representative.

Distributor/Dealer: Please insert contact details.