# Phoenix

## Light Commercial Gas Fired Water Heaters

**Installation**

**Start-Up**

**Maintenance**

**Parts**

**Warranty**

**PH76* Models**

*** "LP" Denotes Propane Gas**
**"S" Denotes Solar Model**

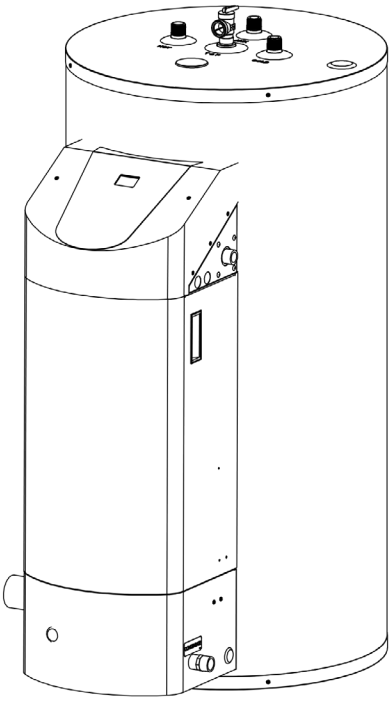

LEAD FREE Safe Drinking Water Act SDWA • Section 1417 | ULTRA Low NOx Emissions SCAQMD Rule 1146.2 | ETL LISTED C US | NSF | ENERGY STAR | AHRI CERTIFIED www.ahridirectory.org

**DANGER**

This manual must only be used by a qualified installer / service technician. Read all instructions in this manual before installing. Perform steps in the given order. Failure to do so could result in substantial property damage, severe personal injury, or death.

**WARNING**

Improper installation, adjustment, alteration, service, or maintenance could void product warranty and cause property damage, severe personal injury, or death.

California Proposition 65 Warning: This product contains chemicals known to the State of California to cause cancer, birth defects, or other reproductive harm.

**NOTICE**

HTP reserves the right to make product changes or updates without notice and will not be held liable for typographical errors in literature.

The surfaces of these products contacted by potable (consumable) water contain less than 0.25% lead by weight as required by the Safe Drinking Water Act, Section 1417.

**NOTE TO CONSUMER: PLEASE KEEP ALL INSTRUCTIONS FOR FUTURE REFERENCE.**

272 Duchaine Blvd. New Bedford, MA 02745 www.htproducts.com

lp-441 Rev. 002 Rel. 011 Date 11.4.19

# ⚠ WARNING

WARNING: If the information in these instructions is not followed exactly, a fire or explosion may result causing property damage, personal injury or death.

- Do not store or use gasoline or other flammable vapors and liquids in the vicinity of this or any other appliance.

## WHAT TO DO IF YOU SMELL GAS

- Do not try to light any appliance.
- Do not touch any electrical switch; do not use any phone in your building.
- Immediately call your gas supplier from a neighbor's phone. Follow the gas supplier's instructions.
- If you cannot reach your gas supplier, call the fire department.
- Installation and service must be provided by a qualified installer, service agency or the gas supplier.

**Improper installation, adjustment, alteration, service, or maintenance can cause injury, property damage, or death. Refer to this manual. Installation and service must be performed by a qualified installer, service agency, or gas supplier.**

## FOR YOUR SAFETY READ BEFORE OPERATING

**WARNING: If you do not follow these instructions exactly, a fire or explosion may result, causing property damage, personal injury or loss of life.**

**A. This appliance does not have a pilot. It is equipped with an ignition device which automatically lights the burner. Do not try to light the burner by hand.**

**B. BEFORE OPERATING smell all around the appliance area for gas. Be sure to smell next to the floor because some gas is heavier than air and will settle on the floor.**

**WHAT TO DO IF YOU SMELL GAS**

- **Do not try to light any appliance**
- **Do not touch any electric switch; do not use any phone in your building**
- **Immediately call your gas supplier from a neighbor's phone. Follow the gas suppliers' instructions.**
- **If you cannot reach your gas supplier, call the fire department.**

**C. Use only your hand to turn the gas control knob. Never use tools. If the handle will not turn by hand, don't try to repair it, call a qualified service technician. Force or attempted repair may result in a fire or explosion.**

**D. Do not use this appliance if any part has been under water. Immediately call a qualified service technician to inspect the appliance and to replace any part of the control system and any gas control which has been under water.**

## OPERATING INSTRUCTIONS

1. **STOP! Read the safety information above.**
2. **Set the thermostat to lowest setting.**
3. **Turn off all electric power to the appliance.**
4. **This appliance is equipped with an ignition device which automatically lights the burner. Do not try to light the burner by hand.**

**GAS VALVE ON**

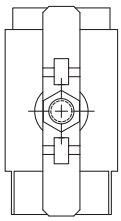

**GAS VALVE OFF**

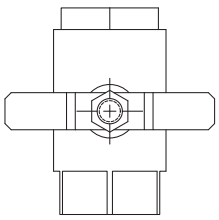

5. **Remove front cover.**
6. **Turn gas shutoff valve to "off". Handle will be across the piping, do not force.**
7. **Wait five (5) minutes to clear out any gas. If you then smell gas, STOP! Follow "B" in the safety information above on this label. If you don't smell gas, go to next step.**
8. **Turn gas shutoff valve to "on". Handle will be in line with piping.**
9. **Install Front Cover.**
10. **Turn on all electric power to appliance.**
11. **Set thermostat to desired setting.**
12. **If the appliance will not operate, follow the instructions "To Turn Off Gas To Appliance" and call your service technician or gas supplier.**

## TO TURN OFF GAS TO APPLIANCE

1. **Set the thermostat to lowest setting.**
2. **Turn off all electric power to the appliance if service is to be performed.**
3. **Remove Front Cover.**
4. **Turn gas shutoff valve to "off". Handle will be across the piping. Do not force.**
5. **Install Front Cover.**

LP-175 Rev. 4 3-11-08

## SPECIAL ATTENTION BOXES

The following defined terms are used throughout this manual to bring attention to the presence of hazards of various risk levels or to important product information.

**DANGER**

**DANGER** indicates an imminently hazardous situation which, if not avoided, will result in serious personal injury or death.

**WARNING**

**WARNING** indicates a potentially hazardous situation which, if not avoided, could result in personal injury or death.

**CAUTION**

**CAUTION** indicates a potentially hazardous situation which, if not avoided, may result in moderate or minor personal injury.

**CAUTION**

**CAUTION used without the safety alert symbol** indicates a potentially hazardous situation which, if not avoided, may result in property damage.

**NOTICE**

**NOTICE** is used to address practices not related to personal injury.

## Foreword

This manual is intended to be used in conjunction with other literature provided with the water heater. This includes all related control information. It is important that this manual, all other documents included in this system, and additional publications including the *National Fuel Gas Code - ANSI Z223.1* (latest versions), be reviewed in their entirety before beginning any work.

Installation should be made in accordance with the regulations of the Authority Having Jurisdiction, local code authorities, and utility companies which pertain to this type of water heating equipment.

Authority Having Jurisdiction (AHJ) – The AHJ may be a federal, state, local government, or individual such as a fire chief, fire marshal, chief of a fire prevention bureau, labor department or health department, building official or electrical inspector, or others having statutory authority. In some circumstances, the property owner or his/her agent assumes the role, and at government installations, the commanding officer or departmental official may be the AHJ.

**NOTE:** HTP reserves the right to modify product technical specifications and components without prior notice.

## For the Installer

This water heater must be installed by qualified and licensed personnel. The installer should be guided by the instructions furnished with the water heater, and by local codes and utility company requirements. In the absence of local codes, preference should be given to the *National Fuel Gas Code - ANSI Z223.1*, latest version.

**Installations Must Comply With:**

Local, state, provincial, and national codes, laws, regulations, and ordinances.

The latest version of the *National Fuel Gas Code, ANSI Z223.1*, from American Gas Association Laboratories, 8501 East Pleasant Valley Road, Cleveland, OH 44131.

In Canada - *CGA No. B149* (latest version), from Canadian Gas Association Laboratories, 55 Scarsdale Road, Don Mills, Ontario, Canada M3B 2R3. Also, *Canadian Electrical Code, C 22.1*, from Canadian Standards Association, 5060 Spectrum Way, Suite 100, Mississauga, Ontario, Canada L4W 5N6.

The latest version of the *National Electrical Code, NFPA No. 70*.

**NOTE:** The gas manifold and controls met safe lighting and other performance criteria when undergoing tests specified in *ANSI Z21.10.3* - latest edition.

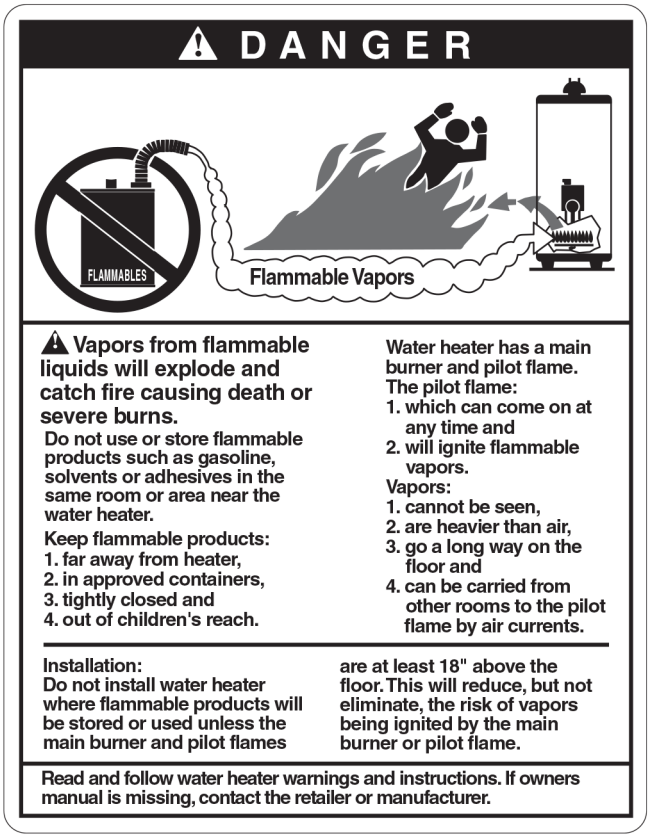


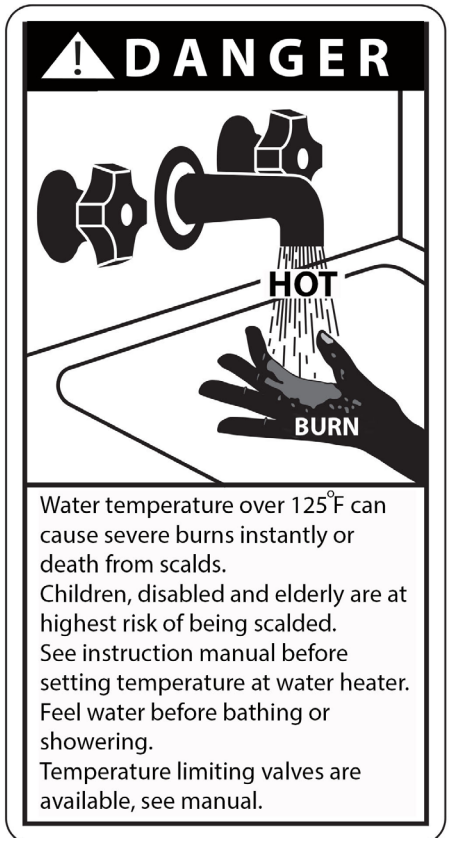

## ⚠ WARNING

**From the Uniform Plumbing Code 2000 - Section 510 - Protection From Damage**

1. Water heaters generating a glow, spark or flame capable of igniting flammable vapors may be installed in a garage, provided the pilots, burners or heating elements and switches are at least eighteen (18) inches (457 mm) above the floor level.

2. Where such water heaters installed within a garage are enclosed in a separate, approved compartment having access only from outside of the garage, such water heaters may be installed at floor level provided the required combustion air is also taken from the exterior of the garage. Fuel burning water heaters having sealed combustion chambers need not be elevated.

3. All water heaters installed in areas where they may be subjected to mechanical damage shall be suitably guarded against such damage by being installed behind adequate barriers or by being elevated or located out of the normal path of a vehicle using any such garage.

4. In seismic zones 3 and 4, water heaters shall be anchored or strapped to resist horizontal displacement due to earthquake motion. Strapping shall be at points within the upper one-third (1/3) and lower one-third (1/3) of its vertical dimensions. At the lower point, a minimum distance of four (4) inches (102 mm) shall be maintained above the controls with the strapping.

5. An water heater supported from the ground shall rest on level concrete or other approved base extending not less than three (3) inches (76 mm) above the adjoining ground level.

6. When an water heater is located in an attic, attic-ceiling assembly, floor-ceiling assembly, or floor-subfloor assembly where damage may result from a leaking water heater, a watertight pan of corrosion resistant materials shall be installed beneath the water heater with a minimum three-quarter (3/4) inch (20 mm) diameter drain to an approved location.

**Table of Contents**


**Part 1 - General Safety Information** **5**
A. Improper Combustion 5
B. Gas 5
C. When Servicing the Water Heating System 5
D. Heater Water 5
E. Freeze Protection 5
F. High Elevation Installations 6
G. Water Temperature Adjustment 6
**Part 2 - Before You Start** **6**
A. What's in the Box 6
B. How the Heater Operates 6
C. Optional Equipment 6
**Part 3 - Prepare the Water Heater** **6**
A. Locating the Water Heater 7
B. Leveling 7
C. Clearances for Service Access 8
D. Residential Garage and Closet Installations 8
E. Exhaust Vent and Intake Pipe 8
1. Direct Vent of Exhaust and Intake 8
2. Power Venting, Indoor Combustion Air in Confined or Unconfined Space 8
F. Carbon Monoxide Detectors 9
G. Prevent Combustion Air Contamination 9
H. Removing a Heater from a Common Vent System 9
I. Water Chemistry Requirements 10
**Part 4 - Piping** **11**
A. Heater Plumbing 12
B. Auxiliary Connections 12
C. Backflow Preventer 12
D. Potable Expansion Tank 12
E. Temperature and Pressure Relief Valve 12
F. Scalding 13
G. Filling the Heater 13
H. Applications 14
**Part 5 - Venting** **16**
A. General 16
B. Approved Materials for Exhaust Vent and Intake Pipe 17
C. Additional Requirements for Installation in Canada 17
D. Exhaust Vent and Intake Pipe Location 18
E. Exhaust Vent and Intake Pipe Sizing 19
F. Longer Vent Runs 19
G. Exhaust Vent and Intake Pipe Installation 19
H. Applications 20
1. Direct Vent Installation of Exhaust and Intake 20
2. Venting Through an Existing System 23
3. Power Venting, Indoor Combustion Air in Confined or Unconfined Space 24
**Part 6 - Condensate Removal** **25**
**Part 7 - Wiring** **27**
A. Line Voltage Input 27
B. Line Voltage Condensate Input 27
C. Low Voltage Outdoor Sensor Input 27
D. Internal Wiring Diagram 28
**Part 8 - Gas Connections** **28**
A. Gas Pipe Sizing Tables 29
1. Gas Pipe Sizing 29
2. Natural Gas Pipe Sizing 29
3. LP (Liquid Propane) Gas Pipe Sizing 29
B. Gas Piping Requirements 29
C. Gas Valve 30
D. Checking Gas Pressure at the Water Heater for Proper Operation 30
**Part 9 - Controls** **31**
A. Control and Display Overview 31
B. Basic Control Functions 32
1. Turning the Water Heater On / Off 32
2. Resetting the Water Heater 32
3. Putting the Water Heater in ECO Mode 32
4. Changing User Setpoint 32
C. Advanced Control Functions 32
1. Upper Level Control Functions 32
2. Technical Service and Navigation 33
D. Outdoor Reset 33
1. Inquiry Mode and Navigation 33
2. History Mode and Navigation 34
3. Reset Mode and Navigation 34
**Part 10 - Start-Up Procedure** **34**
A. Operating Instructions 34
B. Test Mode 35
C. Maintenance 35
**Part 11 - Shutdown** **36**
A. Shutdown Procedure 36
B. Vacation Procedure 36
C. Failure to Operate 36
D. Important Notice 36
**Part 12 - Troubleshooting** **36**
A. Error Code 36
B. Heater Error 36
C. Lockout 36
**Part 13 - Installation Checklist** **40**
**Part 14 - Maintenance** **41**
**Part 15 - Replacement Parts** **43**
Limited Warranty 45
Maintenance Notes 47
Customer Installation Record Form 48

## Part 1 - General Safety Information

This water heater is approved for indoor installations only and is not intended for use as a pool heater. Clearance to combustible materials: 0" top, bottom, sides, and back. Heater must have room for service: 24" front, 3" left and right sides, 6" top, and 0" back are minimum recommended service clearances. (A combustible door or removable panel is acceptable front clearance.) This water heater has been approved for closet installation and installation on combustible flooring. Do not install directly on carpeting. Install the water heater in a location where temperature and pressure relief valve discharge or a leak will not result in damage to the surrounding area. Use only Category IV vent systems.

**WARNING**

**Installer -** Read all instructions in this manual before installing. Perform steps in the given order.

**User -** This manual is for use only by a qualified heating installer / service technician. Have this water heater serviced / inspected annually by a qualified service technician.

**FAILURE TO ADHERE TO THE GUIDELINES ON THIS PAGE CAN RESULT IN SUBSTANTIAL PROPERTY DAMAGE, SEVERE PERSONAL INJURY, OR DEATH.**

**NOTE:** Obey all local codes. Obtain all applicable permits before installing the water heater.

**NOTE:** Install all system components and piping in such a manner that does not reduce the performance of any fire rated assembly.

**NOTE:** If the water heater is exposed to the following, do not operate. Immediately call a qualified service technician.

1. Fire
2. Damage
3. Water

Failure to follow this information could result in property damage, severe personal injury, or death.

**DO NOT USE THIS WATER HEATER IF ANY PART HAS BEEN SUBMERGED IN WATER.** Immediately call a qualified service technician. The water heater MUST BE replaced if it has been submerged. Attempting to operate a water heater that has been submerged could create numerous harmful conditions, such as a potential gas leakage causing a fire and/or explosion, or the release of mold, bacteria, or other harmful particulates into the air. Operating a previously submerged water heater could result in property damage, severe personal injury, or death.

**NOTE:** Water heater damage due to flood or submersion is considered an Act of God, and IS NOT covered under product warranty.

Altering any HTP water heater with parts not manufactured by HTP WILL INSTANTLY VOID the water heater warranty and could result in property damage, personal injury, or death.

This water heater has been designed to heat potable water ONLY. Using this water heater to heat non-potable fluid WILL VOID product warranty, and could result in property damage, personal injury, or death.

**CAUTION**

Do not use this water heater for anything other than its intended purpose (as described in this manual). Doing so could result in property damage and WILL VOID product warranty.

**CAUTION**

High heat sources (sources generating heat 100°F / 37°C or greater, such as stove pipes, space heaters, etc.) may damage plastic components of the water heater as well as plastic vent pipe materials. Such damages ARE NOT covered by warranty. It is recommended to keep a minimum clearance of 8" from high heat sources. Observe heat source manufacturer instructions, as well as local, state, provincial, and national codes, laws, regulations and ordinances when installing this water heater and related components near high heat sources.

### A. Improper Combustion

**WARNING**

Do not obstruct the flow of combustion and ventilating air. Adequate air is necessary for safe operation. Failure to keep the exhaust vent and combustion air intake clear of ice, snow, or other debris could result in property damage, serious personal injury, or death.

### B. Gas

Should overheating or gas supply fail to shut off, turn off the manual gas control valve to the water heater.

### C. When Servicing the Water Heating System

**WARNING**

Be sure to disconnect electrical power before performing service. Failure to do so could result in electrical shock, property damage, serious personal injury, or death.

To avoid electric shock, disconnect electrical supply before performing maintenance.

**NOTE:** When inquiring about service or troubleshooting, reference the model and serial numbers from the water heater rating label.

To avoid severe burns, allow water heater and associated equipment to cool before servicing.

### D. Heater Water

Do not use petroleum-based cleaning or sealing compounds in a water heating system. Gaskets and seals in the system may be damaged. This can result in substantial property damage.

Do not use "homemade cures" or "patent medicines". Damage to the water heater, substantial property damage, and/or serious personal injury may result.

### E. Freeze Protection

**NOTE:** Consider piping and installation when determining heater location.

**CAUTION**

Failure of the water heater due to freeze related damage IS NOT covered by product warranty.

**WARNING**

NEVER use any toxic chemical, including automotive, standard glycol antifreeze, or ethylene glycol made for hydronic (non-potable) systems. These chemicals can attack gaskets and seals in water systems, are poisonous if consumed, and can cause personal injury or death.

**NOTICE**

**UNCRATING THE WATER HEATER** - Any claims for damage or shortage in shipment must be filed immediately against the transportation company by the consignee.

### F. High Elevation Installations

**WARNING**

Natural gas at high elevation might contain less heating value than typical 1,000 BTU/cu ft and therefore can cause improper air / gas mix leading to improper combustion. For natural gas installations above 3,000 ft, call your gas provider to determine the heating value of the supplied natural gas.

### G. Water Temperature Adjustment

If the water heater is going to have a set temperature above 120ºF, you must use an ASSE 1017 rated mixing valve to avoid severe burns or death from scalding temperatures.

**WARNING**

Households with small children, disabled, or elderly persons may require a 120ºF or lower temperature setting to prevent severe personal injury or death due to scalding.

| Approximate Time / Temperature Relationships in Scalds | |
|---|---|
| 120ºF | More than 5 minutes |
| 125ºF | 1 1/2 to 2 minutes |
| 130ºF | About 30 seconds |
| 135ºF | About 10 seconds |
| 140ºF | Less than 5 seconds |
| 145ºF | Less than 3 seconds |
| 150ºF | About 1 1/2 seconds |
| 155ºF | About 1 second |

**Table 1 - Approximate Time / Temperature Relationships in Scalds**

## Part 2 - Before You Start

Remove all sides of the shipping crate of the water heater.

### A. What's in the Box

Components included with the water heater:

- Intake PVC Tee with Screens
- Exhaust PVC Coupling with Screens
- Temperature and Pressure Relief Valve (Ships Installed)
- Installation Manual and Warranty
- User's Information Manual
- Solar Supplement (S Models Only)

### B. How the Heater Operates

**Modulating Condensing Technology** is an intelligent system that delivers highly efficient water heating, maximizing efficiency by measuring the data parameters of your water heating system. Some of its features are:

**Stainless Steel Water Storage Tank**

The stainless steel water storage tank has a combustion chamber submerged into the tank water. When the water heater is fired, combustion gases heat the combustion chamber walls, transferring heat directly into the surrounding water. These hot gases are blown into secondary heat exchanger coils, where more heat from these gases is transferred into the water.

**Modulating Combustion System**

The control monitors the water heating system and temperatures, regulating burner output during operation to match system demand. This increase in efficiency allows for substantial fuel savings.

**Gas Valve**

The gas valve senses suction from the blower, allowing gas to flow only if the gas valve is energized and combustion air is flowing.

**Tank Sensor**

This sensor monitors system water temperature. The control module adjusts burner firing rate so the outlet water temperature meets the set point.

**Control**

The integrated control system monitors water temperature and adjusts fan speed to regulate the heater's energy output. This allows the unit to deliver the required amount of heated energy and nothing more.

**Burner**

Constructed of high grade stainless steel, the burner uses pre-mixed air and gas and provides a wide range of firing rates.

**Condensate Removal System**

This is a condensing high efficiency water heater with a condensate removal system. Condensate is nothing more than water vapor derived from combustion products, similar to that of an automobile when it is initially started. It is very important that the condensate line slopes away from the water heater and down to a suitable inside drain.

If the condensate outlet on the heater is lower than the drain, us a condensate removal pump (Part # 554200, available from HTP). In addition, local authorities may require a condensate neutralizer to neutralize the condensate. Condensate neutralizers are made up of lime crystals, marble, or phosphate chips. Neutralizers can be installed in the field by the installer and purchased from HTP (p/n 7450P-212).

It is also very important not to expose the condensate line to freezing temperatures or any type of blockage. Plastic tubing must be the only material used for the condensate line. Steel, brass, copper, or other materials will be subject to corrosion or deterioration. A second vent may be necessary to prevent condensate line vacuum lock on a long horizontal run. Also, an increase in pipe size may be necessary to allow condensate to drain properly. Support of the condensate line may be necessary to avoid blockage of the condensate flow.

**Spark Ignition**

The burner flame is ignited by applying high voltage to the system spark electrode. This causes a spark from electrode to ground.

### C. Optional Equipment

Optional equipment available from HTP (and Part #):

- 3" Stainless Steel Outside Vent Termination Kit (V1000)
- 2" PVC Concentric Vent Kit (KGAVT0501CVT)
- 3" PVC Concentric Vent Kit (KGAVT0601CVT)
- 3" Polypro Vent Kit (8400P-001)
- 3" Polypro Pipe
  (33' length # 8400P-002, 49.5' length # 8400P-003)
- Outdoor Sensor (7250P-319)
- Condensate Neutralizer (7450P-212)

## Part 3 - Prepare the Water Heater

Remove all sides of the shipping crate to allow the heater to be moved into its installation location.

**CAUTION**

**COLD WEATHER HANDLING** - If the water heater has been stored in a very cold location (BELOW 0ºF) before installation, handle with care until the components come to room temperature. Failure to do so could result in damage to the water heater.

Carefully consider installation when determining heater location. Please read the entire manual before attempting installation. Failure to properly take factors such as heater venting, piping, condensate removal, and wiring into account before installation could result in wasted time, money, and possible property damage and personal injury.

### A. Locating the Water Heater

**⚠ WARNING**

This water heater is certified for indoor use only. DO NOT INSTALL OUTDOORS. Outdoor installations ARE NOT covered by warranty. Failure to install the water heater indoors could result in property damage, severe personal injury, or death.

Incorrect ambient conditions can lead to damage to the heating system and put safe operation at risk. Ensure that the installation location adheres to the information included in this manual. Failure to do so could result in property damage, serious personal injury, or death. Failure of heater or components due to incorrect operating conditions IS NOT covered by product warranty.

This water heater must be installed upright in the vertical position as described in this manual. DO NOT attempt to install this water heater in any other orientation. Doing so will result in improper water heater operation and property damage, and could result in serious personal injury or death.

1. Installation Area (Mechanical Room) Operating Conditions

- Ensure ambient temperatures are higher than 32ºF / 0ºC and lower than 104ºF / 40ºC
- Prevent the air from becoming contaminated by the products, places, and conditions listed in this manual
- Avoid continuously high levels of humidity
- Never close existing ventilation openings
- Ensure a minimum 1" clearance around hot water and exhaust vent pipes
- NOTE: To prevent condensing in the fan, it is recommended to avoid prolonged exposure to temperatures below 45ºF

**⚠ WARNING**

This water heater has a condensate disposal system that may freeze if exposed to sustained temperatures below 32°F. Precautions should be taken to protect the condensate trap and drain lines from sustained freezing conditions. Failure to take precautions could result in property damage, severe personal injury, or death.

2. Check for nearby connections to:

- System water piping
- Venting connections
- Gas supply piping
- Electrical power
- Condensate drain

3. Check area around heater. Remove any combustible materials, gasoline, and other flammable liquids.

**⚠ WARNING**

Failure to keep the water heater area clear and free of combustible materials, liquids, and vapors can result in substantial property damage, severe personal injury, or death.

**CAUTION**

High heat sources (generating heat 100°F / 37°C or greater, such as boiler flue pipes, space heaters, etc.) may damage plastic components of the water heater as well as plastic vent pipe materials. Such damages ARE NOT covered by warranty. It is recommended to keep a minimum clearance of 8" from high heat sources. Observe heat source manufacturer instructions, as well as local, state, provincial, and national codes, laws, regulations, and ordinances when installing this water heater and related components near high heat sources.

**CAUTION**

The service life of the water heater's exposed metallic surfaces, such as the casing, as well as internal surfaces, such as the heat exchanger, are directly influenced by proximity to damp and salty marine environments. In such areas higher concentration levels of chlorides from sea spray coupled with relative humidity can lead to degradation of water heater components. In these environments, heaters must not be installed using direct vent systems which draw outdoor air for combustion. Such heaters must be installed using room air for combustion. Indoor air will have a much lower relative humidity, and hence potential corrosion will be minimized.

All appliances eventually leak. Locate the appliance where any leakage from the relief valve, related piping, tank, or connections will not result in damage to surrounding areas or lower floors of the building. Any appliance should be installed in such a manner that if it should leak the resulting flow of water will not cause damage to the area in which it is installed. National Plumbing codes require a drain pan for any appliance installation. This drain pan should be sized with a maximum depth of 2", and a minimum diameter 2" greater than the diameter of the appliance. The drain pan should empty into an open drain line. This drain line should be 3/4" ID minimum, piped to an open drain. Leakage damages ARE NOT covered by warranty. Failure to install a drain pan is the sole responsibility of the owner and/or installer. Reference UPC 2000 (Uniform Plumbing Code) Section 510 - Protection from Damage or IPC 200 (International Plumbing code) Section 504 - Safety Devices. Leakage damages ARE NOT covered by warranty.
In addition, water leak detection devices and automatic water shutoff valves are readily available at plumbing supply houses. IT IS HIGHLY RECOMMENDED BY THE MANUFACTURER TO INSTALL WATER LEAK DETECTION DEVICES AND AUTOMATIC SHUTOFF VALVES IN ANY APPLIANCE INSTALLATION WHERE A LEAKAGE OF WATER COULD RESULT IN PROPERTY DAMAGES.

Failure of the water heater or components due to incorrect operating conditions IS NOT covered by product warranty.

4. Gas control system components must be protected from dripping water during operation and service.

5. If the heater is to replace an existing heater, check for and correct any existing system problems, such as:

- System leaks
- Location that could cause the system and heater to freeze and leak
- Incorrectly sized expansion tank

6. Clean and flush system when reinstalling a heater.

**NOTE:** When installing in a zero clearance location, it may not be possible to read or view some product labeling. It is recommended to make note of the heater model and serial number.

**NOTE:** A combustible door or removable panel is acceptable front clearance.

### B. Leveling

**⚠ CAUTION**

In order for the condensate to properly flow out of the collection system, the area where you locate the heater must be level. Location must also fully support the weight of the filled water heater.

## C. Clearances for Service Access

**WARNING**

The space must be provided with combustion / ventilation air openings correctly sized for all other appliances located in the same space as the heater. The heater cover must be securely fastened to prevent the heater from drawing air from the heater room. This is particularly important if the heater is in a room with other appliances. Failure to comply with the above warnings could result in substantial property damage, severe personal injury, or death.

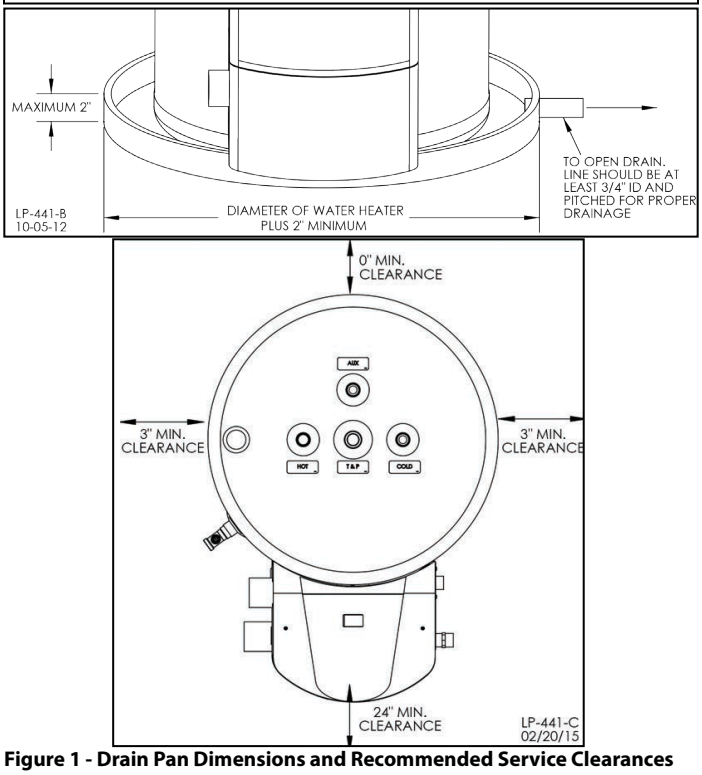


**Figure 1 - Drain Pan Dimensions and Recommended Service Clearances**

**NOTE:** In addition, it is recommended to provide a minimum service clearance of 6" from the top of the water heater to allow for piping of the T&P relief valve and top ports. Depending on the installation, this clearance may need to be substantially greater than 6".

**NOTE:** If you do not provide the minimum clearances shown in Figure 1 it might not be possible to service the heater without removing it from the space.

## D. Residential Garage and Closet Installations

**CAUTION**

Check with your local Authority Having Jurisdiction for requirements when installing the water heater in a garage or closet. Please read the entire manual before attempting installation. Failure to properly take factors such as venting, piping, condensate removal, and wiring into account before installation could result in wasted time, money, and possible property damage and personal injury.

**Precautions**

If the heater is located in a residential garage, per ANSI Z223.1:

- Install the water heater burner and ignition devices a minimum of 18" above the floor of the garage. This will ensure the burner and ignition devices are well off the floor.
- When raising the water heater ensure the entire bottom and fully filled weight of the water heater are fully supported.
- Locate or protect the water heater so it cannot be damaged by a moving vehicle.

**WARNING**

The space must be provided with correctly sized combustion/ ventilation air openings for all other appliances located in the space with the water heater. For power venting installations using room air for combustion, refer to the venting section, this manual, for descriptions of confined and unconfined spaces. Do not install the water heater in an attic. Failure to comply with these warnings could result in substantial property damage, severe personal injury, or death.

## E. Exhaust Vent and Intake Pipe

The heater is rated ANSI Z21.10.3 Category IV (pressurized vent, likely to form condensate in the vent) and requires a special vent system designed for pressurized venting.

**NOTE: The venting options described here (and further detailed in the Venting section, this manual) are the lone venting options approved for this water heater. Failure to vent the water heater in accordance with the provided venting instructions will void the warranty.**

**DANGER**

Failure to vent the water heater properly will result in serious personal injury or death.

**WARNING**

Do not attempt to vent this water heater by any means other than those described in this manual. Doing so will void the warranty and may result in severe personal injury or death.

Vents must be properly supported. Heater exhaust and intake connections are not designed to carry heavy weight. Vent support brackets must be within 1' of the heater and the balance at 4' intervals. Heater must be readily accessible for visual inspection for first 3' from the water heater. Failure to properly support vents could result in property damage, severe personal injury, or death.

The exhaust discharged by this water heater may be very hot. Avoid touching or other direct contact with the exhaust gases of the vent termination assembly. Doing so could result in severe personal injury or death.

**1. Direct Vent of Exhaust and Intake**

If installing a direct vent option, combustion air must be drawn from the outdoors directly into the water heater intake and exhaust must terminate outdoors. There are three basic direct vent options detailed in this manual: 1. Side Wall Venting, 2. Roof Venting, and 3. Unbalanced Venting.

Be sure to locate the heater such that the exhaust vent and intake piping can be routed through the building and properly terminated. Different vent terminals can be used to simplify and eliminate multiple penetrations in the building structure (see Optional Equipment in Venting Section). The exhaust vent and intake piping lengths, routing, and termination methods must all comply with the methods and limits given in the Venting Section, this manual.

When installing a combustion air intake from outdoors, care must be taken to utilize uncontaminated combustion air. **To prevent combustion air contamination, see Table 2.**

**2. Power Venting, Indoor Combustion Air in Confined or Unconfined Space**

This heater requires fresh, uncontaminated air for safe operation and must be installed in a mechanical room where there is adequate combustion and ventilating air. **NOTE: To prevent combustion air contamination, see Table 2.**

Combustion air from the indoor space can be used if the space has adequate area or when air is provided through a duct or louver to supply sufficient combustion air based on the water heater input. Never obstruct the supply of combustion air to the water

heater. If the water heater is installed in areas where indoor air is contaminated (see Table 2) it is imperative that the water heater be installed as direct vent so that all combustion air is taken directly from the outdoors into the water heater intake connection.

**Unconfined space** is space with volume greater than 50 cubic feet per 1,000 BTU/hr (4.8 cubic meters per kW) of the total input rating of all fuel-burning appliances installed in that space. Rooms connected directly to this space through openings not furnished with doors are considered part of the space. See Venting Section for details.

**Confined space** is space with volume less than 50 cubic feet per 1,000 BTU/hr (4.8 cubic meters per kW) of the total input rating of all fuel-burning appliances installed in that space. Rooms connected directly to this space through openings not furnished with doors are considered part of the space.

When drawing combustion air from inside a conventionally constructed building to a confined space, such space should be provided with two permanent openings: one located 6" (15cm) below the space ceiling, the other 6" (15cm) above the space floor. Each opening should have a free area of one square inch per 1,000 BTU/hr (22cm$^2$/kW) of the total input of all appliances in the space, but not less than 100 square inches (645cm$^2$).

If the confined space is within a building of tight construction, air for combustion must be obtained from the outdoors as outlined in the Venting section of this manual.

**CAUTION**

When drawing combustion air from the outside into the mechanical room, care must be taken to provide adequate freeze protection.

**WARNING**

Failure to provide an adequate supply of fresh combustion air can cause poisonous flue gases to enter the living space, resulting in severe personal injury or death. To prevent combustion air contamination, see Table 2.

### F. Carbon Monoxide Detectors

**In the Commonwealth of Massachusetts and As Required by State and Local Codes:**

Installation of Carbon Monoxide Detectors: At the time of installation or replacement of the vented gas fueled appliance, the installing plumber or gas fitter shall observe that a hard wired carbon monoxide detector with an alarm and battery back-up is installed on the floor level where the gas appliance is installed, unless the appliance is located in a detached, uninhabitable structure separate from the dwelling, building, or structure used in whole or in part for residential purposes.

In addition, the installing plumber or gas fitter shall observe that a hard wired carbon monoxide detector with an alarm and battery back-up is installed on each additional level of the dwelling, building, or structure served by the vented gas appliance. It shall be the responsibility of the property owner to secure the service of qualified licensed professionals for the installation of hard wired carbon monoxide detectors.

a. In the event that the vented gas fueled appliance is installed in a crawl space or attic, the hard wired carbon monoxide detector with alarm and battery back-up shall be installed on the next adjacent floor level.

b. In the event that these requirements cannot be met at the time of completion of installation, the owner shall have a period of thirty (30) days to comply with the above requirements; provided, however, that during said thirty (30) day period, a battery operated carbon monoxide detector with an alarm shall be installed.

**WARNING**

Do not attempt to vent this water heater by any means other than those described in this manual. Doing so will void the warranty and may result in severe personal injury or death.

Approved Carbon Monoxide Detectors: Each carbon monoxide detector as required in accordance with the above provisions shall comply with NFPA 70 and be ANSI/UL 2034 listed and IAS certified.

### G. Prevent Combustion Air Contamination

Install intake air piping for the heater as described in the Venting Section, this manual. Do not terminate exhaust in locations that can allow contamination of intake air.

**WARNING**

Ensure that the intake air will not contain any of the contaminants in Table 2. Contaminated air will damage the heater, resulting in possible substantial property damage, severe personal injury, or death. For example, do not pipe intake air near a swimming pool or laundry facilities. These areas always contain contaminants.

| Products to Avoid | Areas Likely to Have Contaminants |
|---|---|
| Spray cans containing fluorocarbons | Dry cleaning / laundry areas and establishments |
| Permanent wave solutions | Swimming pools |
| Chlorinated waxes / cleaners | Metal fabrication plants |
| Chlorine-based swimming pool chemicals | Beauty shops |
| Calcium chloride used for thawing | Refrigeration repair shops |
| Sodium chloride used for water softening | Photo processing plants |
| Refrigerant leaks | Auto body shops |
| Paint or varnish removers | Plastic manufacturing plants |
| Hydrochloric or Muriatic acid | Furniture refinishing areas and establishments |
| Cements and glues | New building construction |
| Antistatic fabric softeners used in clothes dryers | Remodeling areas |
| Chlorine-type bleaches, laundry detergents, and cleaning solvents | Garages and workshops |
| Adhesives used to fasten building products | |

**Table 2 - Products and Areas Likely to Have Contaminants**

**NOTE: DAMAGE TO THE HEATER CAUSED BY EXPOSURE TO CORROSIVE VAPORS IS NOT COVERED BY WARRANTY.** (Refer to the limited warranty for complete terms and conditions.)

### H. Removing a Heater from a Common Vent System

**DANGER**

Do not install the heater into a common vent with any other appliance. This will cause flue gas spillage or appliance malfunction, resulting in possible substantial property damage, severe personal injury, or death.

**WARNING**

Failure to follow all instructions can result in flue gas spillage and carbon monoxide emissions, causing severe personal injury or death.

When removing an existing heater, follow the steps below.

1. Seal any unused openings in the common venting system.
2. Visually inspect the venting system for proper size and horizontal pitch to determine if there is blockage, leakage, corrosion, or other deficiencies that could cause an unsafe condition.

3. If practical, close all building doors, windows, and doors between the space in which the water heater remains connected to the common venting system and other spaces in the building. Turn on clothes dryers and any appliances not connected to the common venting system. Turn on any exhaust fans, such as range hoods and bathroom exhausts, at maximum speed. Do not operate a summer exhaust fan. Close all fireplace dampers.
4. Place in operation the appliance being inspected. Follow the lighting instructions. Adjust the thermostat so the appliance will operate continuously.
5. Test for spillage at the draft hood relief opening after 5 minutes of main burner operation. Use the flame of a match or candle or smoke from a cigarette.
6. After it has been determined that each appliance remaining connected to the common venting system properly vents when tested as outlined, return doors, windows, exhaust fans, fireplace dampers, and any other gas burning appliances to their previous condition of use.
7. Any improper operation of the common venting system should be corrected to conform to the National Fuel Gas Code, ANSI Z223.1. When resizing any portion of the common venting system, the system should approach the minimum size as determined using the appropriate tables in Appendix G of ANSI Z223.1.

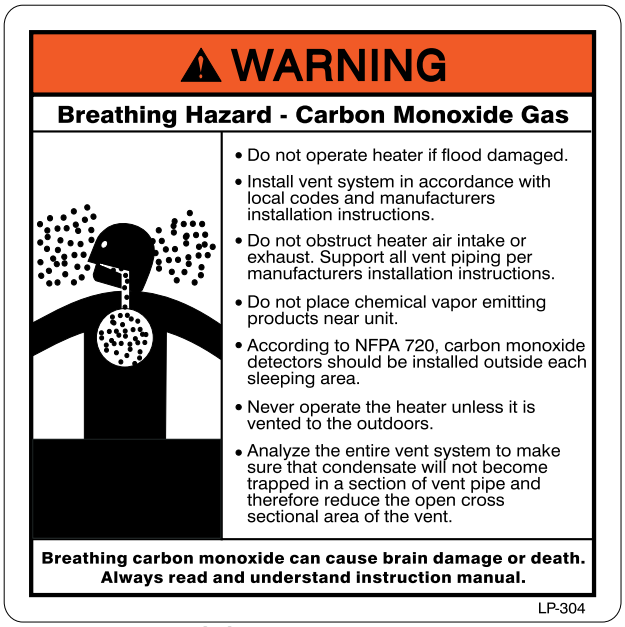


**Figure 2 - CO Warning Label**

## I. Water Chemistry Requirements

**CAUTION**

Chemical imbalance of the water supply may affect efficiency and cause severe damage to the appliance and associated equipment. Water quality must be professionally analyzed to determine whether it is necessary to treat the water. Various solutions are available to adjust water quality. Adverse water quality will affect the reliability of the system. In addition, operating temperatures above 135°F will accelerate the build-up of lime scale and possibly shorten appliance service life. Failure of an appliance due to lime scale build-up, low pH, or other chemical imbalance IS NOT covered by the warranty.

The water must be potable, free of corrosive chemicals, sand, dirt, and other contaminates. It is up to the installer to ensure the water does not contain corrosive chemicals or elements that can damage the heat exchanger. Potable water is defined as drinkable water supplied from utility or well water in compliance with EPA secondary maximum contaminant levels (40 CFR Part 143.3). If the water contains contaminants higher than outlined by the EPA, water treatment is recommended and additional, more frequent maintenance may be required.

If you suspect that your water is contaminated in any way, discontinue use of the appliance and contact an authorized technician or licensed professional.

- **Water pH between 6.5 and 8.5**
  - pH levels below 6.5 can cause an increase in the rate of corrosion. pH of 8.5 or higher can potentially cause lime scale build-up
  - Maintain water pH between 6.5 and 8.5. Check with litmus paper or have it chemically analyzed by a local water treatment company.
  - If the pH is not between 6.5 and 8.5, consult a local water treatment company for solutions.
- **Hardness less than 12 grains (200 mg/L) (Residential Use - water temperatures below 140°F)**
- **Hardness less than 7 grains (120 mg/L) (Commercial Use - water temperatures of 140°F and greater)**
  - Hardness levels above the required amounts can lead to lime scale build-up throughout the system. Water below 5 grains/gallon (85 mg/L) may be over softened.
  - Consult local water treatment companies for unusually hard water areas (above the required amounts) or for other treatment solutions if water is being over softened (below 5 grains/gallon [85 mg/L]).
- **Chloride concentration less than 100 ppm (mg/L)**
  - Do not fill appliance or operate with water containing chlorides in excess of 100 ppm (mg/L).
  - Using chlorinated fresh water should be acceptable as levels are typically less than 5 ppm (mg/L).
  - Do not connect the appliance to directly heat swimming pool or spa water.
- **Total Dissolved Solids (TDS) less than 500 ppm (mg/L)**
  - Total dissolved solids are minerals, salts, metals, and charged particles that are dissolved in water.
  - The greater the amounts of TDS present, the higher the corrosion potential due to increased conductivity in the water.
  - If using softened water to fill the appliance, it is still possible to have high TDS. This water can be corrosive. Consult local water treatment companies for other treatment solutions to reduce this effect.

***NOTE:** To promote appliance service life, it is strongly recommended to follow the maintenance procedures in this manual.

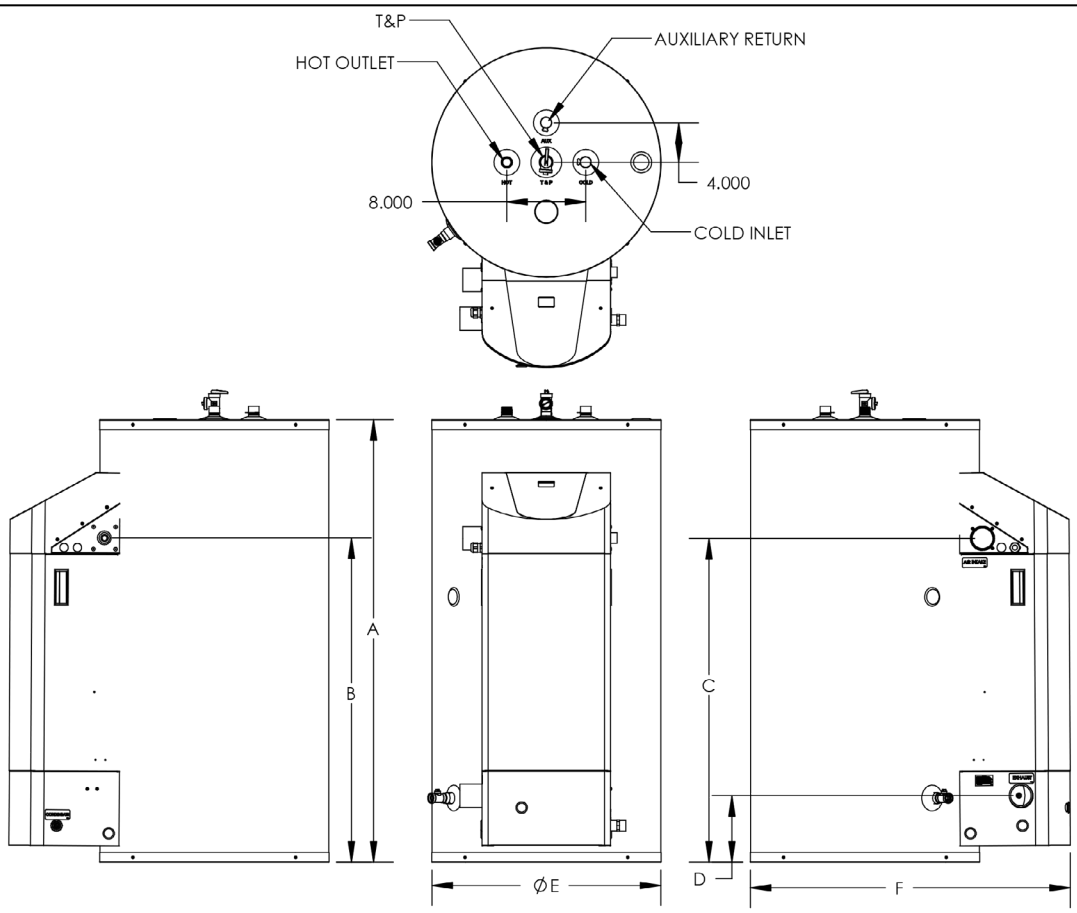


| MODEL # | GALLONS | A | B | C | D | E | F |
|---|---|---|---|---|---|---|---|
| PH76-50 | 45 | 44-3/4" | 33" | 33" | 6-3/4" | 23" | 32-1/2" |
| PH76-60 | 55 | 52-5/8" | | | | | |
| PH76-80 | 75 | 69" | | | | | |

LP-441-D
12/14/16

| MODEL # | INPUT MODULATION | AIR INTAKE/EXHAUST VENT SIZE | INLET/OUTLET SIZE | AUXILIARY CONN. | GAS LINE CONN. | SYSTEM RELIEF PIPE SIZE | SHIPPING WEIGHT (LBS) | MAX. TEMPERATURE LIMIT |
|---|---|---|---|---|---|---|---|---|
| PH76-50 | 25,000 -76,000 | 2" | 3/4" | 3/4" | 1/2" | 3/4" | 155 | 160° |
| PH76-60 | | | | | | | 170 | |
| PH76-80 | | | | | | | 195 | |

* MODEL NUMBER MAY HAVE A SUFFIX DESIGNATION OF "LP" FOR PROPANE GAS
ALL DIMENSIONS ARE APPROXIMATE

**Figure 3 - Water Heater Dimensions - NOTE: All Dimensions Are Approximate**

| Performance Specifications for Phoenix Light Duty Models | | | | | | | | | | | | | |
|---|---|---|---|---|---|---|---|---|---|---|---|---|---|
| **BTU/Hr** | **Efficiency** | **Temperature Rise in Degrees Fahrenheit (F) and Celsius (C)** | | | | | | | | | | | |
| | | **(°F)** | 40 | 50 | 60 | 70 | 80 | 90 | 100 | 110 | 120 | 130 | 140 |
| | | **(°C)** | 22 | 28 | 33 | 39 | 44 | 50 | 56 | 61 | 67 | 72 | 78 |
| 76,000 | 97% | **GPH** | 231 | 187 | 158 | 135 | 119 | 107 | 97 | 86 | 79 | 73 | 69 |
| | | **LPH** | 874 | 708 | 598 | 511 | 450 | 405 | 367 | 326 | 299 | 276 | 261 |

**Table 3 - Recovery on Rating Plate is based at 97% Thermal Efficiency at 70° Fahrenheit rise, as required by ANSI**

## Part 4 - Piping

**WARNING**

Failure to follow the instructions in this section WILL VOID the warranty and may result in property damage, severe personal injury, or death.

**CAUTION**

DO NOT pipe this water heater with black iron, galvanized steel, steel, or lead pipe. Doing so will result in premature product failure and property damage, and WILL VOID the warranty.

**CAUTION**

Do not apply heat to the Hot or Cold water heater connections. If sweat connections are used, sweat tubing to the adapter before fitting adapter to the water connections on the heater. Any heat applied to the water heater connections will permanently damage the dip tube and/or heat traps. Damages due to improper installation practices ARE NOT covered by warranty.

**CAUTION**

Dielectric unions or galvanized steel fittings must not be used in a system with this water heater. Doing so WILL VOID the warranty. Use only copper, brass, or stainless steel fittings. Teflon thread sealant must be used on all connections.

### A. Heater Plumbing

**CAUTION**

Use two wrenches when tightening water piping at heater. Use one wrench to prevent the heater return or supply line from turning. Failure to prevent piping connections from turning could cause damage to heater components.

The heater control module uses temperature sensors to provide both high limit protection and modulating temperature control. The control module also provides low water protection by sensing the water level in the tank. Some codes / jurisdictions may require additional external controls.

The domestic water connections must be installed in accordance to all local and national plumbing codes, or any applicable standard which prevails. The inlet (cold) and outlet (hot) ports are 3/4" on all models.
It is recommended to install a sweat shut-off valve and a union in the cold inlet piping and hot outlet to ease future servicing. If there is a backflow preventer or any type of a no return valve in the system, install an additional tee here, suitable for a potable hot water expansion tank. In the hot outlet, install a suitable adapter to match the copper tubing of the plumbing system. A thermal trap or heat trap loop may be installed here to provide additional energy savings and prevent the thermal siphoning of domestic hot water.

### B. Auxiliary Connections

The auxiliary connections are additional connections for a recirculation connection, air handlers, plate exchangers, or other devices that supply hot water. These connections must be installed in accordance with all local and national codes or any applicable standard that prevails. Auxiliary connections are 3/4" on all models. Never use dielectric unions or galvanized steel fittings. Use only copper or brass fittings. Sealant must be used on all connections.

**⚠ WARNING**

Never connect auxiliary connections to any system that uses glycol or other solutions formulated for hydronic systems. These auxiliary connections are to be used only in a potable water system. Failure to follow this warning could result in serious injury or death.

### C. Backflow Preventer

Use a backflow preventer specifically designed for water heater installations. This valve should be installed on the cold water fill supply line per local codes.

### D. Potable Expansion Tank

A potable hot water expansion tank is required to offset heated water expansion. In most city plumbing systems, the water meter has a no return or back flow device built into the system to prevent back flowing of water into city mains. Some local codes require back flow preventers on all incoming water supplies. The hot water expansion tank must be listed for potable water use. The expansion tank should be located on the cold inlet piping close to the water heater.

**Expansion Tank and Make-Up Water**

1. Ensure that the expansion tank is sized to correctly handle heater and system water volume and temperature.

**CAUTION**

Undersized expansion tanks cause system water to be lost from the relief valve, causing make-up water to be added. Eventual heater failure can result due to excessive make-up water addition. **SUCH FAILURE IS NOT COVERED BY WARRANTY.**

The expansion tank must be suitable for hot potable water systems.

2. The expansion tank must be located as shown in Applications, this manual, or following recognized design methods. See expansion tank manufacturer's instructions for details.

### E. Temperature and Pressure Relief Valve

**⚠ WARNING**

Overheated water and high pressures can cause water tank explosion. A properly sized temperature and pressure relief valve must be installed in the opening provided on the water heater. Failure to install a properly sized temperature and pressure relief valve could result in explosion and property damage, serious injury, or death.

To avoid water damage or scalding due to relief valve operation:

- Discharge line must be connected to relief valve outlet and run to a safe place of disposal. Terminate the discharge line in a manner that will prevent possibility of severe burns or property damage should the relief valve discharge.
- Discharge line must be as short as possible and the same size as the valve discharge connection throughout its entire length.
- Discharge line must pitch downward from the valve and terminate at least 6" above the floor drain, making discharge clearly visible.
- The discharge line shall terminate plain, not threaded, with a material serviceable for temperatures of 375°F or greater.
- Do not pipe discharge to any location where freezing could occur.
- No valve may be installed between the relief valve and heater or in the discharge line. Do not plug or place any obstruction in the discharge line.
- Test the operation of the relief valve after filling and pressurizing the system by lifting the lever. Make sure the valve discharges freely. If the valve fails to operate correctly, immediately replace with a new properly rated relief valve.
- Test T&P valve at least once annually to ensure the waterway is clear. If valve does not operate, turn the heater "off" and call a plumber immediately.
- Take care whenever operating relief valve to avoid scalding injury or property damage.

FAILURE TO COMPLY WITH THE ABOVE GUIDELINES COULD RESULT IN FAILURE OF RELIEF VALVE OPERATION, RESULTING IN POSSIBILITY OF SUBSTANTIAL PROPERTY DAMAGE, SEVERE PERSONAL INJURY, OR DEATH.

Do not thread a cap or plug into the relief valve or relief valve line under any circumstances! Explosion and property damage, serious injury, or death may result.

**RE-INSPECTION OF T&P RELIEF VALVES: T&P valves should be inspected AT LEAST ONCE EVERY THREE YEARS, and replaced if necessary,** by a licensed plumbing contractor or qualified service technician to ensure that the product has not been affected by corrosive water conditions and to ensure that the valve and discharge line have not been altered or tampered with illegally. Certain naturally occuring conditions may corrode the valve and its components over time, rendering the valve inoperative. Such conditions can only be detected if the valve and its components are physically removed and inspected. **Do not attempt to conduct an inspection on your own.** Contact your plumbing contractor for a re-inspection to assure continued safety.

**WARNING**

**FAILURE TO RE-INSPECT THE T&P VALVE AS DIRECTED COULD RESULT IN UNSAFE TEMPERATURE AND/OR PRESSURE BUILD-UP WHICH CAN RESULT IN PROPERTY DAMAGE, SERIOUS PERSONAL INJURY, OR DEATH.**

### F. Scalding

This water heater can deliver scalding water. Be careful whenever using hot water to avoid scalding injury. Certain appliances such as dishwashers and automatic clothes washers may require increased water temperatures. By setting the thermostat on this heater to obtain the increased water temperature required by these appliances you may create the potential for scald injury.

Water temperature over 125°F can cause severe burns instantly or death from scalds.
Children, disabled and elderly are at highest risk of being scalded.
See instruction manual before setting temperature at water heater.
Feel water before bathing or showering.
Temperature limiting valves are available, see manual.

To protect against injury, install a mixing valve in the water system. This valve will reduce point of use discharge temperatures by mixing cold and hot water in branch supply lines. Such valves are available from your local plumbing supplier.

Table 4 details the relationship of water temperature and time with regard to scald injury and may be used as a guide in determining the safest water temperature for your applications.

**WARNING**

An ASSE 1017 or ASSE 1070 temperature limiting or mixing valve is recommended in installations servicing disabled or elderly persons, or children. Mixing valves do not eliminate the risk of scalding.
To avoid scalding:

- Set the water heater set point temperature as low as possible.
- Feel water before bathing or showering.
- If thermostatic valves are required, use devices specifically designed for such purpose. Install these devices in accordance with instructions provided by the manufacturer.

Failure to install a temperature limiting or mixing valve and follow these instructions could result in property damage, severe personal injury, or death due to scalds.

| Approximate Time / Temperature Relationships in Scalds | |
|---|---|
| 120ºF | More than 5 minutes |
| 125ºF | 1 1/2 to 2 minutes |
| 130ºF | About 30 seconds |
| 135ºF | About 10 seconds |
| 140ºF | Less than 5 seconds |
| 145ºF | Less than 3 seconds |
| 150ºF | About 1 1/2 seconds |
| 155ºF | About 1 second |

**Table 4 - Approximate Time / Temperature Relationships in Scalds**

### G. Filling the Heater

**WARNING**

The water heater must be full of water and the system fully purged BEFORE powering the water heater. When filling the water heater, open a hot water tap to release air in the tank and piping. All air has been purged from the system when water runs freely from the faucets.
Applying power to the water heater when it is not full of water will damage the heat exchanger, and could result in property damage, serious personal injury, or death. Such damages ARE NOT covered by water heater warranty.

- Make certain the drain valve is completely closed.
- Open the shut-off valve in the cold water supply line.
- Open the hot water faucets to allow air to vent from the heater and piping.
- Allow sufficient time for the heater to completely fill with water.

## H. Applications

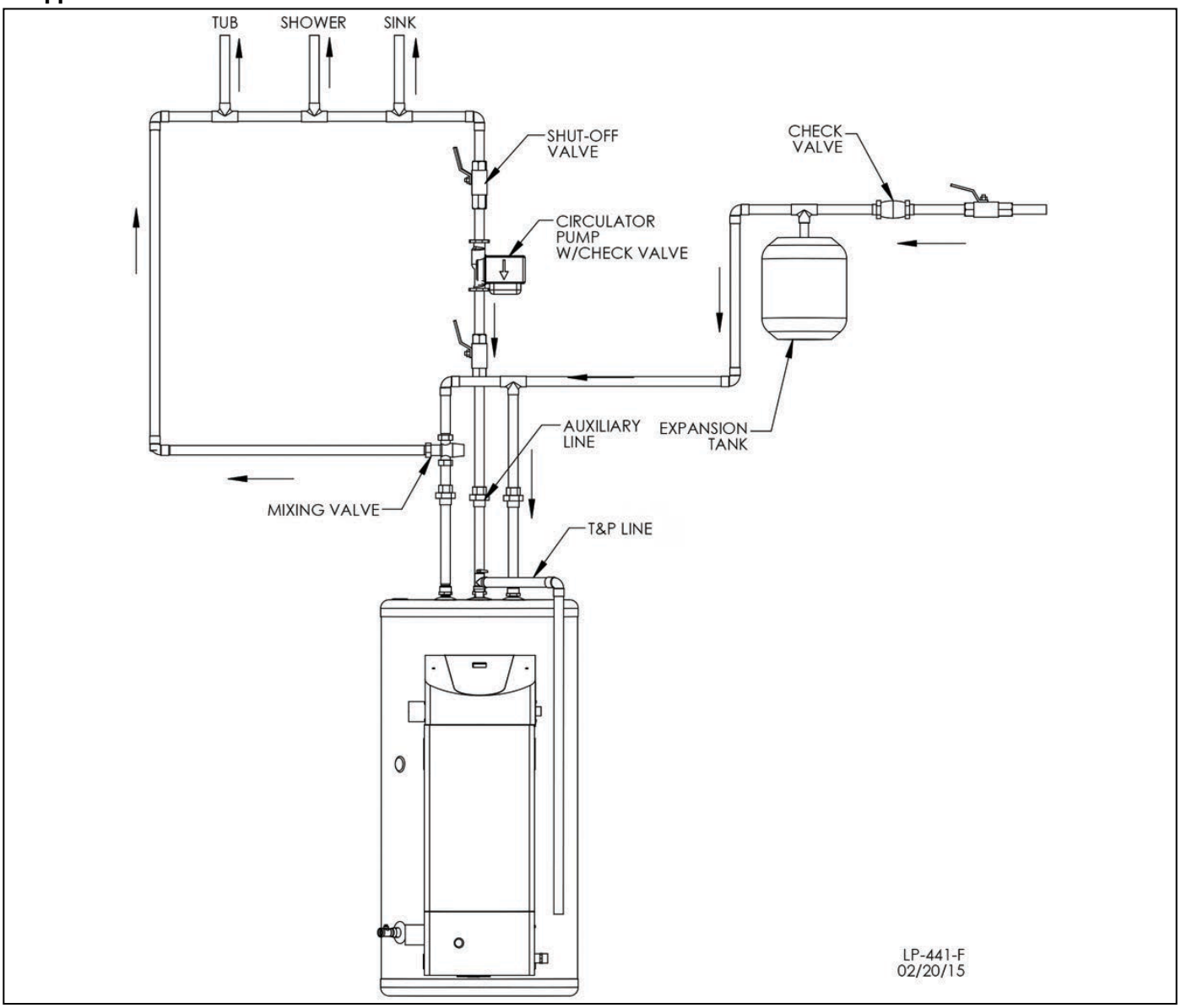


**Figure 4 - Piping with Recirculation Line and Thermostatic Mixing Valve Piping**

**NOTES:**

1. Minimum pipe size should match connection size. Upsize pipe accordingly if greater flow is required.
2. A thermal expansion tank suitable for potable water must be sized and installed within this piping system between the backflow preventer and the cold water inlet.
3. All circulators should have an integral flow check.
4. Drains and check valve between unit and storage tank will assist in purging air from system.
5. These drawings are meant to demonstrate system piping only. The installer is responsible for all equipment and detailing required by local codes. In Massachusetts, you must install a vacuum relief valve per 248 CMR.
6. Mixing valve application is optional, but recommended to help prevent scalding.
7. Always shut off power to the water heater or isolate the heater from the system if ANY plumbing work is to be done. Running the water heater without water will result in dry-firing.

| ⚠ WARNING |
|---|
| An ASSE 1017 thermostatic mixing valve MUST be installed when using outdoor reset. Failure to do so could result in substantial property damage, serious injury, or death. |
| The piping will not support the weight of the water heater circulator pump. Refer to the pump manufacturer's installation instructions to properly support the circulator pump. Failure to comply with these instructions could result in substantial property damage, severe personal injury, or death. |

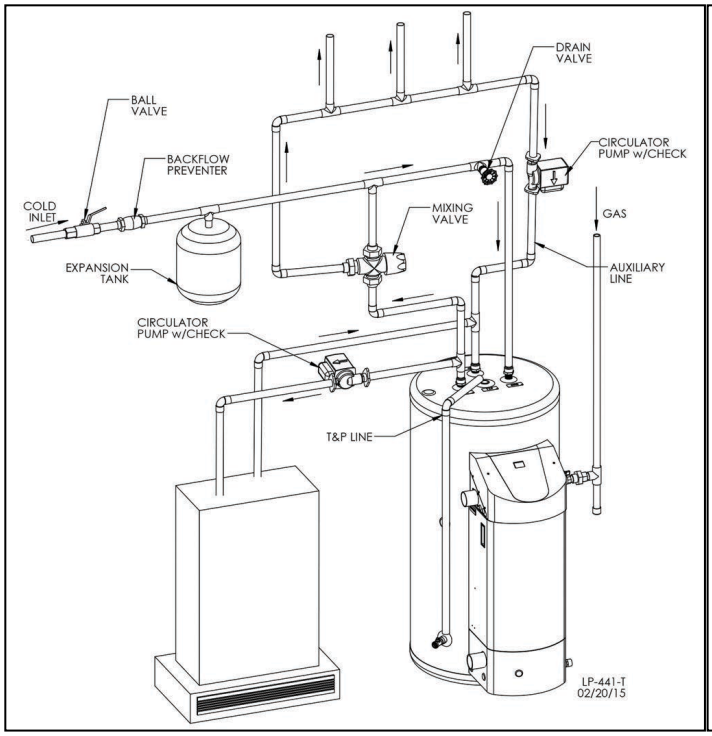


Figure 5 - Piping with Air Handler on Side

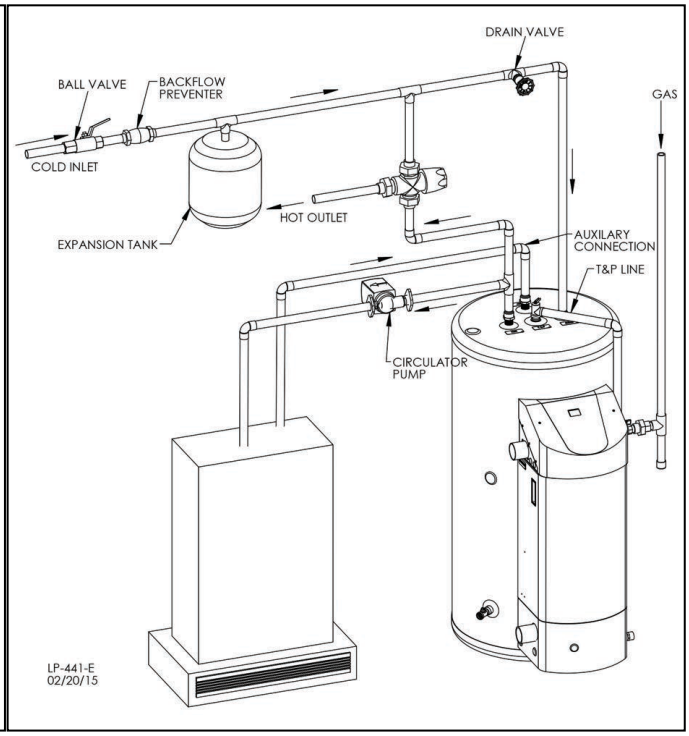


Figure 6 - Additional View with Air Handler on Side

**NOTES:**

1. Minimum pipe size should match connection size. Upsize pipe accordingly if greater flow is required.
2. A thermal expansion tank suitable for potable water must be sized and installed within this piping system between the backflow preventer and the cold water inlet.
3. All circulators should have an integral flow check.
4. Drains and check valve between unit and storage tank will assist in purging air from system.
5. These drawings are meant to demonstrate system piping only. The installer is responsible for all equipment and detailing required by local codes. In Massachusetts, you must install a vacuum relief valve per 248 CMR.
6. Mixing valve application is optional, but recommended to help prevent scalding.
7. Always shut off power to the water heater or isolate the heater from the system if ANY plumbing work is to be done. Running the water heater without water will result in dry-firing.

**NOTES FOR AIR HANDLER APPLICATION:**

1. MASSACHUSETTS STATE PLUMBING CODE REQUIRES A DISTANCE NO GREATER THAN 50 FEET FROM THE WATER HEATER TO THE FAN COIL IN THE AIR HANDLER.
2. MASSACHUSETTS STATE PLUMBING CODE REQUIRES AN ELECTRONICALLY TIMED CIRCULATOR PUMP TO ACTIVATE EVERY SIX HOURS FOR 60 SECONDS. THIS CIRCULATOR IS REQUIRED TO BE BRONZE OR STAINLESS.
3. ALL WATER PIPING MUST BE INSULATED.
4. YOU MUST INSTALL A VACUUM RELIEF VALVE PER 248 CMR.

**NOTE: THIS DRAWING IS MEANT TO DEMONSTRATE SYSTEM PIPING ONLY. THE INSTALLER IS RESPONSIBLE FOR ALL EQUIPMENT AND DETAILING REQUIRED BY LOCAL CODES.**

| ⚠ WARNING |
|---|
| An ASSE 1017 thermostatic mixing valve MUST be installed when using outdoor reset. Failure to do so could result in substantial property damage, serious injury, or death. |
| The piping will not support the weight of the water heater circulator pump. Refer to the pump manufacturer's installation instructions to properly support the circulator pump. Failure to comply with these instructions could result in substantial property damage, severe personal injury, or death. |

## Part 5 - Venting

**⚠ DANGER**

The heater must be vented as detailed in this section. Ensure exhaust vent and intake piping complies with these instructions regarding vent system. Inspect finished exhaust vent and intake piping thoroughly to ensure all joints are well secured, airtight, and comply with all applicable code requirements, as well as the instructions provided in this manual. Failure to properly install the vent system will result in severe personal injury or death.

### A. General

**⚠ DANGER**

This heater is certified as a "Category IV" appliance and requires a special venting system. The vent system will operate with a positive pressure in the pipe. Exhaust gases must be piped directly outdoors using the vent materials and rules outlined in these instructions. Do not connect vent connectors serving appliances vented by natural draft into any portion of mechanical draft systems operating under positive pressure. Follow the venting instructions carefully. Failure to do so will result in substantial property damage, severe personal injury, or death.

1. Installation should be made in accordance with the regulations of the Authority Having Jurisdiction, local code authorities, and utility companies which pertain to this type of water heating equipment.
2. Install the venting system in accordance with these instructions and with the National Fuel Gas Code, ANSI Z223.1/NFPA 54, CAN/CGA B149, and / or applicable provisions of local building codes.
3. This water heater must be vented with materials, components, and systems listed and approved for Category IV appliances.

**⚠ DANGER**

Exhaust and intake are to be piped separately. This heater cannot share a common exhaust or intake with multiple appliances. Failure to follow these instructions will result in substantial property damage, severe personal injury, or death.

**NOTE:** To avoid contamination often contained in indoor air, it is best to pipe all intake combustion air directly to the outdoors.

**NOTE:** Care must be taken to prevent condensate freezing in the exhaust vent pipe system. See local, state, provincial, and national codes for best practices to prevent condensate freezing in the exhaust vent pipe system.

**⚠ WARNING**

Improper seating of vent pipe gaskets can cause eventual gasket failure and exhaust gas leakage. Ensure the exhaust vent pipe is properly beveled and seated before insertion into the flue adapter. Failure to do so could result in property damage, severe personal injury, or death.

Exhaust vent adaptors are not designed as load-bearing devices, and must not be used to support exhaust vent piping. All vent pipes must be properly connected, supported, and the exhaust vent must be pitched a minimum of 1/4" per foot back to the heater to allow drainage of condensate. Failure to properly support vent piping and follow the information in this statement could result in product damage, severe personal injury, or death.

**⚠ WARNING**

**Breathing Hazard - Carbon Monoxide Gas**

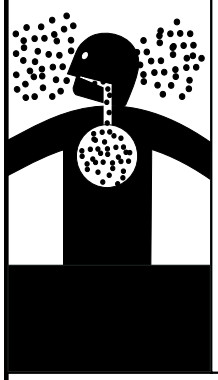

- Do not operate heater if flood damaged.
- Install vent system in accordance with local codes and manufacturers installation instructions.
- Do not obstruct heater air intake or exhaust. Support all vent piping per manufacturers installation instructions.
- Do not place chemical vapor emitting products near unit.
- According to NFPA 720, carbon monoxide detectors should be installed outside each sleeping area.
- Never operate the heater unless it is vented to the outdoors.
- Analyze the entire vent system to make sure that condensate will not become trapped in a section of vent pipe and therefore reduce the open cross sectional area of the vent.

**Breathing carbon monoxide can cause brain damage or death. Always read and understand instruction manual.**

LP-304

**⚠ DANGER**

Due to the extreme flammability of most glues, cements, solvents, and primers used to join plastic exhaust vent and intake pipes, explosive solvent vapors must be cleared from all vent piping before start-up. Avoid using excess cement or primer, as this may pool in the vent pipes. Vent assemblies should be allowed to cure for a period of at least 8 hours before powering a connected appliance. Failure to follow these instructions will result in substantial property damage, severe personal injury, or death. It is the installers' responsibility to understand the hazards associated with explosive solvents and take the necessary precautions to avoid these risks.

**⚠ WARNING**

- DO NOT insulate the first three (3) linear feet of the exhaust vent run.
- CPVC, Polypropylene, or Stainless Steel pipe material MUST be used if the first three (3) linear feet of the exhaust vent run is insulated or passes through an enclosed space greater than 6" in length, such as a wall. **NOTE:** Only Stainless Steel pipe material may be insulated.
- If CPVC is used to meet these requirements, the balance may be installed with approved PVC pipe.

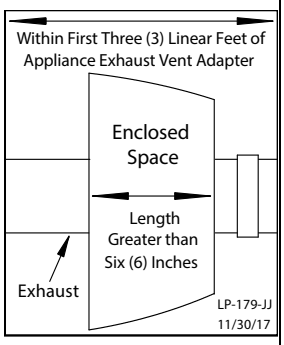


- If Polypropylene or Stainless Steel is used to meet these requirements, the balance of the vent run must be installed with the same material.
- Failure to comply with this warning could result in property damage, severe personal injury, or death.

It is required to insert the provided exhaust and intake screens into the vent terminations to prevent blockage caused by debris or birds. Failure to keep terminations clear could result in property damage, severe personal injury, or death.

### B. Approved Materials for Exhaust Vent and Intake Pipe

| Item | Material | Standards for Installation In: | |
|---|---|---|---|
| | | United States | Canada |
| **Pipe and Fittings Approved for Intake ONLY** | ABS* | ANSI/ASTM D2661 | NOT PERMITTED |
| | | | |
| **Pipe Approved for Intake OR Exhaust Vent** | PVC Schedule 40/80 | ANSI/ASTM D1785 | PVC, CPVC, and PP Venting Must be ULC-S636 Certified. IPEX is an approved manufacturer in Canada. |
| | PVC-DWV Schedule 40/80 | ANSI/ASTM D2665 | |
| | CPVC Schedule 40/80 | ANSI/ASTM F441 | |
| | Polypropylene | UL-1738 or ULC-S636 | |
| | Stainless Steel AL29-4C | Certified for Category IV and Direct Vent Appliance Venting | |
| | | | |
| **Pipe Fittings** | PVC Schedule 40 | ANSI/ASTM D2466 or D2665 | PVC, CPVC, and PP Venting Must be ULC-S636 Certified. IPEX is an approved manufacturer in Canada. |
| | PVC Schedule 80 | ANSI/ASTM D2467 or D2665 | |
| | CPVC Schedule 40 | ANSI/ASTM F438 | |
| | CPVC Schedule 80 | ANSI/ASTM F439 | |
| | | | |
| **Pipe Cement** | ABS* | ANSI/ASTM D2235 | NOT PERMITTED |
| | PVC | ANSI/ASTM D2564 | IPEX System 636 Cements and Primers |
| | CPVC | ANSI/ASTM F493 | |
| **Pipe Primer** | PVC / CPVC | ASTM F656 | |

**⚠ DANGER**

- The exhaust and intake components installed with this appliance must be used for near appliance piping BEFORE transitioning to the approved materials listed above. DO NOT REMOVE these installed components. Doing so WILL VOID appliance warranty.
- PVC / CPVC pipe and fittings of the same diameter are considered interchangeable.
- The use of cellular core PVC (ASTM F891), cellular core CPVC, or Radel® (polyphenolsulfone) in non-metallic venting systems is prohibited.
- Covering non-metallic vent pipe and fittings with thermal insulation is prohibited.
- DO NOT connect PVC/CPVC to Polypropylene without an approved vent connector.
- Any transition to Polypropylene MUST be done in the vertical within five (5) feet of the appliance.
- When installing AL29-4C vent piping, install a PVC-to-stainless adapter at the appliance vent connection, and at the termination when using a PVC termination kit. DO NOT mix AL29-4C piping from different manufacturers unless using adapters specifically designed for the purpose by the manufacturer.
- A double wall vent or insulated material may be used when using stainless steel vent material in a freezing climate.
- *ABS may be used for air intake applications ONLY. ABS is NOT PERMITTED for use in Canada.
- Contact the venting material manufacturer if there is any question about the applicability of the proposed venting material.

Failure to follow these directions will result in substantial property damage, severe personal injury, or death.

**Table 5 - Approved Materials for Exhaust Vent and Intake Pipe**

**⚠ WARNING**

DO NOT mix components from different venting systems. The vent system could fail, causing leakage of flue products into the living space. Use only the approved pipe and fitting materials, and primer and cement specifically designed for the material used, as listed in the above table. Failure to do so could result in property damage, serious injury, or death.

**CAUTION**

High heat sources (generating heat 100°F / 37°C or greater, such as boiler flue pipes, space heaters, etc.) may damage plastic components of the water heater as well as plastic vent pipe materials. Such damages ARE NOT covered by warranty. It is recommended to keep a minimum clearance of 8" from high heat sources. Observe heat source manufacturer instructions, as well as local, state, provincial, and national codes, laws, regulations, and ordinances when installing this water heater and related components near high heat sources.

**NOTE:** The use of double-wall vent or insulated material for the combustion air intake pipe is recommended in cold climates to prevent the condensation of airborne moisture in the incoming combustion air.

**⚠ DANGER**

You must not use "B" vent in an exhaust application. "B" vent is for intake applications ONLY. Using "B" vent in an exhaust application will result in serious injury or death.

### C. Additional Requirements for Installation in Canada

1. Installations must be made with a vent pipe system certified to ULC-S636. IPEX is an approved vent manufacturer in Canada supplying vent material listed to ULC-S636. Additionally, you may use AL29-4C stainless steel venting to comply with Canadian requirements.
2. The first three (3) feet of vent pipe from the water heater flue outlet must be readily accessible for visual inspection. 3. The components of the certified vent system must not be interchanged with other vent systems or unlisted pipe / fittings.

## D. Exhaust Vent and Intake Pipe Location

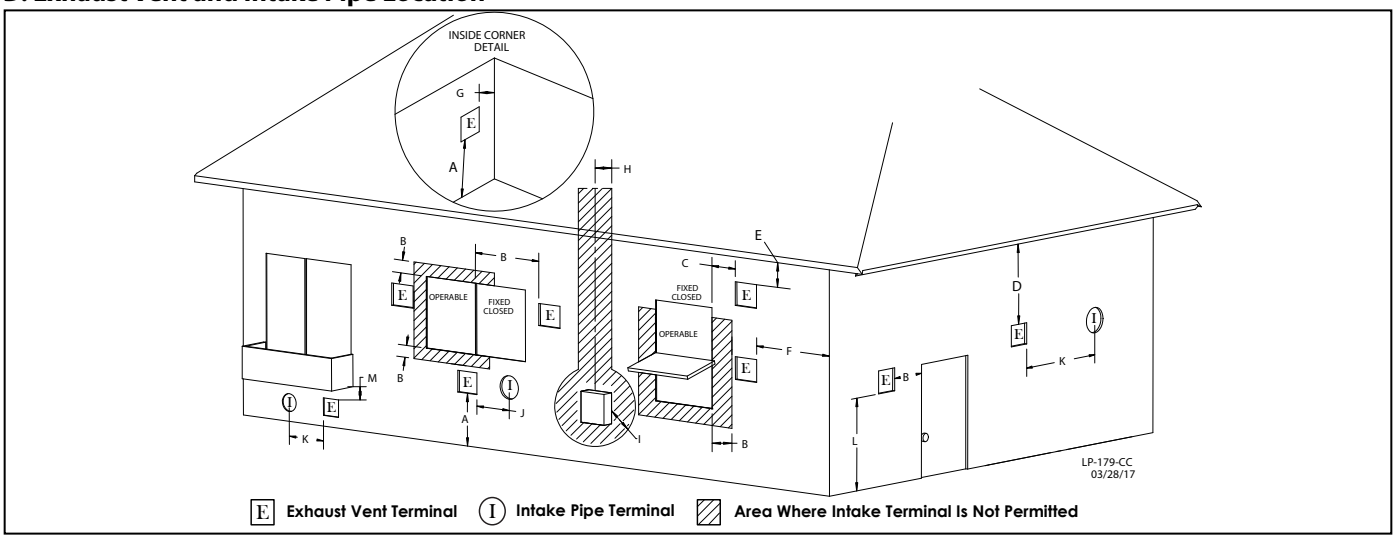


**Figure 7 - Exit Terminals for Direct Vent Systems - ANSI Z223.1 / NFPA 54 for US and CAN/CSA B149.1 for Canada**

| | DESCRIPTION | | US | CANADA |
|---|---|---|---|---|
| **A** | Clearance above grade, veranda, porch, deck, or balcony | | 1 foot (30 cm) | |
| **B** | Clearance to window or door that may be opened | Direct Vent | 1 foot | 3 feet (91 cm) |
| | | Power Vent | 4 ft below or to side of opening; 1 ft above opening | |
| **C** | Clearance to permanently closed window | | * | |
| **D** | Vertical clearance to ventilated soffit located above the terminal within a horizontal distance 2 feet (61 cm) from the center line of the terminal | | * | |
| **E** | Clearance to unventilated soffit | | * | |
| **F** | Clearance to outside corner | | * | |
| **G** | Clearance to inside corner | | * | |
| **H** | Clearance to each side of center line extended above meter / regulator assembly | | * | |
| **I** | Clearance to service regulator vent outlet | | * | Above a regulator within 3 feet (91 cm) horizontally of the vertical center line of the regulator vent outlet to a maximum vertical distance of 15 ft (4.5 m) |
| **J** | Clearance to nonmechanical air supply inlet to building or the combustion air inlet to any other appliance | Direct Vent | 1 foot | 3 feet (91 cm) |
| | | Power Vent | 4 ft below or to side of opening; 1 ft above opening | |
| **K** | Clearance to mechanical air supply inlet | | 3 feet above if within 10 feet horizontally | 6 feet (1.83 m) |
| **L** | Clearance above paved sidewalk or paved driveway located on public property | Direct Vent | * | 7 feet (2.13 m) |
| | | Power Vent | 7 feet (2.13 m) | |
| **M** | Clearance under veranda, porch deck, or balcony | | * | 1 foot (30 cm) |

**Table 6 - Vent Termination Clearances - *NOTE: For clearances not specified in ANSI Z223.1 / NFPA 54 for US and CAN/CSA B149.1 for Canada, please use clearances in accordance with local installation codes and the requirements of the gas supplier.**

**⚠ WARNING**

The building owner is responsible for keeping the exhaust and intake terminations free of snow, ice, or other potential blockages, as well as scheduling routing maintenance. Failure to keep the vent piping terminations clear and properly maintain the heater could result in property damage, severe personal injury, or death.

**⚠ WARNING**

For each floor containing bedroom(s), a carbon monoxide detector and alarm shall be placed in the living area outside the bedrooms, as well as in the room that houses the heater. Detectors and alarms shall comply with NFPA 720 (latest edition). Failure to comply with these requirements could result in product damage, severe personal injury, or death.

## E. Exhaust Vent and Intake Pipe Sizing

1. The exhaust vent and intake pipe size is 2".
2. The total equivalent length of exhaust vent and intake pipe **should not exceed 150 feet**.
   a. The equivalent length of elbows, tees, and other fittings are listed in the Friction Loss Table.

| Friction Loss Equivalent in Piping and Fittings | | |
|---|---|---|
| **Fittings or Piping** | **Equivalent Feet** | |
| | 2" | 3" |
| **90 Degree Elbow*** | 5' | 5' |
| **45 Degree Elbow** | 3' | 3' |
| **Coupling** | 0' | 0' |
| **Air Inlet Tee** | 0' | 0' |
| **Straight Pipe** | 1' | 1' |
| **Concentric Kit** | 3' | 3' |
| **V500 2" Kit** | 1' | N/A |
| **V1000 3" Kit** | N/A | 1' |
| **V2000 4" Kit** | N/A | 1' |

**Table 7 - *Friction loss for long radius elbow is 1 foot less. NOTE: Consult Polypropylene venting instructions for friction loss and pressure drop equivalents.**

   b. For example: If the exhaust vent has two 90º elbows and 10 feet of PVC pipe we will calculate:
   Exhaust Vent Equivalent Length = (2x5) + 10 = 20 feet.
   Further, if the intake pipe has two 90º elbows, one 45º elbow, and 10 feet of PVC pipe, the following calculation applies:
   Intake Pipe Equivalent Length = (2x5) + 3 + 10 = 23 feet.
   Finally, if a concentric kit is used we find:
   Total Equivalent Length = 20 + 23 + 3 = 46 feet.
   The total equivalent length is 46 feet, well below the maximum of 150 feet.
   c. Effort should be made to keep a minimum difference in equivalent length between the exhaust vent and intake pipe.
3. The minimum total equivalent length is 16 feet.

**CAUTION**

Do not exceed the maximum lengths for vent pipes. Excessive length could result in heater shutdown and property damage.

Failure to provide a minimum total vent length of 16 equivalent feet could result in property damage and improper product operation.

## F. Longer Vent Runs

The maximum total equivalent length can be extended by increasing the diameter of both the exhaust vent and intake pipes. However, the transitions should begin a minimum of 15 equivalent feet from the water heater.

   a. **The maximum total equivalent length for increased diameter vent pipes is 200 feet.**
   b. Transitions should always be made in vertical sections of pipe to prevent the condensate from pooling in the vent pipe.

| Vent Connection | Reducing Coupling | Vent Transition |
|---|---|---|
| 2" | 3" x 2" | 3" |

**Table 8 - Vent Run Transition**

   c. Transition from 2" to 3" pipe should be made at the water heater.

## G. Exhaust Vent and Intake Pipe Installation

**WARNING**

All joints of positive pressure vent systems must be sealed completely to prevent leakage of flue products into the living space. Failure to do so could result in property damage, serious injury, or death.

1. Use only solid PVC, CPVC, or stainless steel pipe or a Polypropylene vent system approved for use with Category IV appliances.
ABS pipe material may be used on air intake piping **only**.
2. Remove all burrs and debris from joints and fittings.
3. When using PVC or CPVC pipe, all joints must be properly cleaned, primed, and cemented. Use only cement and primer approved for use with the pipe material. Cement must conform to ASTM D2564 for PVC and ASTM F493 for CPVC pipe. **NOTE: DO NOT CEMENT POLYPROPYLENE PIPE.**
4. Ensure the vent is located where it will not be exposed to prevailing winds.
5. In all roof venting applications, exhaust discharge must point away from the pitch of the roof.
6. To prevent water leakage, install adequate roof flashing where the pipe enters the roof.
7. Do not locate vent over public walkways, driveways, or parking lots. Condensate could drip and freeze, resulting in a slip hazard or damage to vehicles and machinery.
8. Due to potential moisture build-up, sidewall venting may not be the preferred venting option. To save time and cost, carefully consider venting installation and location.
9. Horizontal lengths of exhaust vent must slope back towards the water heater not less than ¼" per foot to allow condensate to drain from the vent pipe.
10. The exhaust vent must terminate where vapors cannot make accidental contact with people or pets, or damage shrubs or plants.
11. In vacant chimney applications, install and seal a rain cap over existing chimney openings.
12. All piping must be fully supported. Use pipe hangers at a minimum of 4 foot intervals to prevent sagging of the pipe where condensate may form.
13. Do not use the heater to support any piping.
14. A screened straight coupling is provided with the heater for use as an outside exhaust termination.
15. A screened inlet air tee is provided with the heater to be used as an outside intake termination.
16. Maximum Snow Level Determination: These installation instructions reference snow levels in establishing a minimum height for the installation of exhaust vent or air intake terminations. Snow levels shall be determined as follows:
   a. The installation location may, by ordinance, designate how snow levels are calculated in that location; or
   b. In the absence of specific ordinances, snow levels shall be calculated from the average monthly maximum depth of snow accumulation as indicated by the National Weather Service's 10 year statistics for the installation location/geographical area.

In addition:

- Total length of vent piping shall not exceed the limits specified in this manual.
- The vent piping for this direct vented appliance is approved for zero clearance to combustible construction.
- The flue products coming from the exhaust vent will create a large plume when the heater is in operation. Avoid venting in areas that will affect neighboring buildings or be considered objectionable.
- DO NOT locate exhaust vent or intake pipe in a parking area where machinery may damage the pipe.
- DO NOT vent near soffit vents, crawl space vents, or other areas

where condensate or vapor could create a nuisance or hazard or cause property damage.

- DO NOT vent where condensate vapor could cause damage or could be detrimental to the operation of regulators, relief valve, or other equipment.

**In the Commonwealth of Massachusetts and as Required by State and Local Codes:**

- The vented gas fueled appliance shall not be installed so its combustion, ventilation, or dilution air is obtained from a bedroom or bathroom.
- Signage: Whenever any through-the-wall (horizontal or sidewall) vent is installed less than seven feet above the finished grade, a metal or plastic identification plate shall be permanently mounted to the exterior of the building at a minimum height of eight feet above grade directly in line with the exhaust vent terminal. The sign shall read, in print no less than 0.5 inches in size, "GAS VENT DIRECTLY BELOW. KEEP CLEAR OF ALL OBSTRUCTIONS".
- Marking of Exhaust Vent and Intake Pipe: Piping used for ventilation, make-up, or combustion air intake shall be labeled as follows:
  a. Throughout the entire developed length:
    i. Labels must be placed every ten feet for exposed/visible piping; or
    ii. Labels must be placed every three feet for concealed piping.
  b. At all changes of direction;
  c. On each side of a penetration through a partition, wall or ceiling; and
  d. The labels shall be black lettering that:
    i. Indicates that the piping is used for ventilation, make-up, or combustion air intake, and
    ii. The letters shall be sized equal to a minimum of the pipe diameter. However, for piping with a diameter exceeding two inches, said lettering does not need to be larger than two inches.

The following table lists optional exhaust/intake terminations available from HTP:

| Description | Stock Code |
|---|---|
| 2" PVC Concentric Termination Kit | KGAVT0501CVT |
| 3" PVC Concentric Termination Kit | KGAVT0601CVT |
| 2" Stainless Steel Termination Kit | V500 |
| 3" Stainless Steel Termination Kit | V1000 |
| 3" Polypro Vent Kit | 8400P-001 |

**Table 9 - Optional Vent Kits**

## H. Applications

### 1. Direct Vent Installation of Exhaust and Intake

If installing a direct vent option, combustion air must be drawn from the outdoors directly into the water heater intake, and exhaust must terminate outside. There are three basic direct vent options detailed in this manual: 1. Side Wall Venting, 2. Roof Venting, and 3. Unbalanced Venting.

Be sure to locate the heater such that the exhaust vent and intake pipe can be routed through the building and properly terminated. Different vent terminals can be used to simplify and eliminate multiple penetrations in the building structure (see Optional Equipment in Venting Section). The exhaust vent and intake pipe lengths, routing and termination methods must all comply with the methods and limits given in the Venting section of this manual.

When installing a combustion air intake from outdoors, care must be taken to utilize uncontaminated combustion air. **NOTE:** To prevent combustion air contamination, see Table 2.

**⚠ WARNING**

Take extra precaution to adequately support the weight of vent pipes terminating through the roof. Failure to properly support roof terminated piping could result in property damage, serious injury, or death.

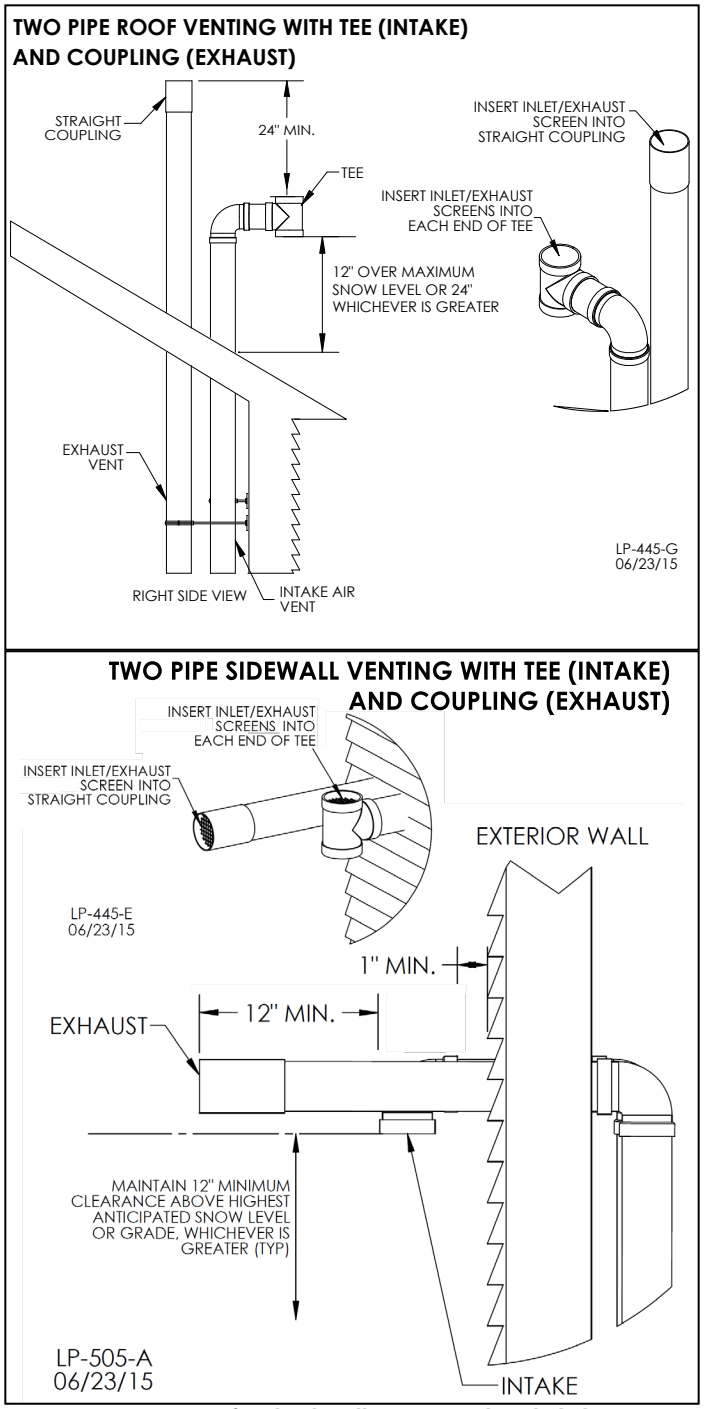


**Figure 8 - Two Pipe Roof and Sidewall Venting with Included Equipment (Tee and Coupling)**

**NOTE:** These drawings are meant to demonstrate system venting only. The installer is responsible for all equipment and detailing required by local codes.

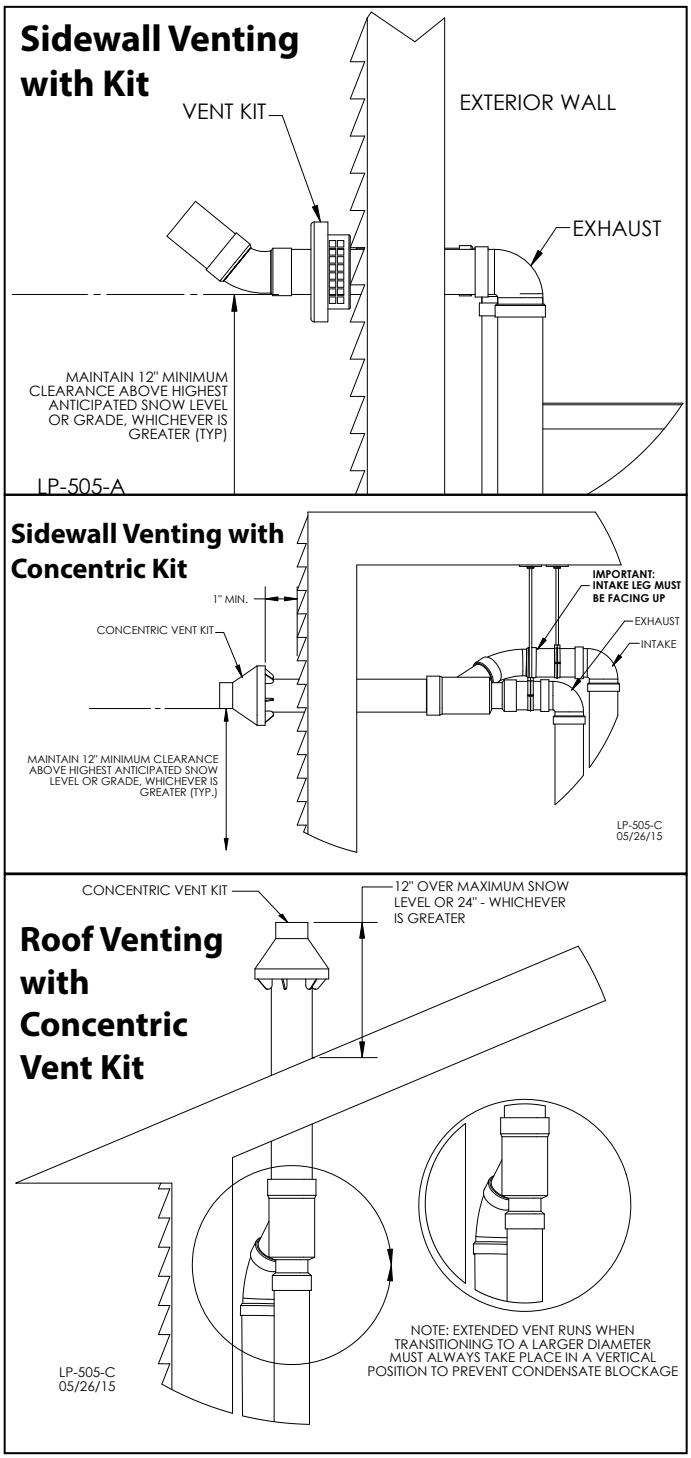


**Figure 9 - Venting with Optional Kits (NOT INCLUDED WITH THE WATER HEATER)**

**WARNING**

All vent pipes must be glued, properly supported, and the exhaust pitched a minimum of 1/4" per foot back to the heater to allow drainage of condensate. When placing support brackets on vent piping, the first bracket must be within 1 foot of the water heater and the balance of 4 foot intervals on the vent pipe. Venting must be readily accessible for visual inspection from the first three feet from the heater.

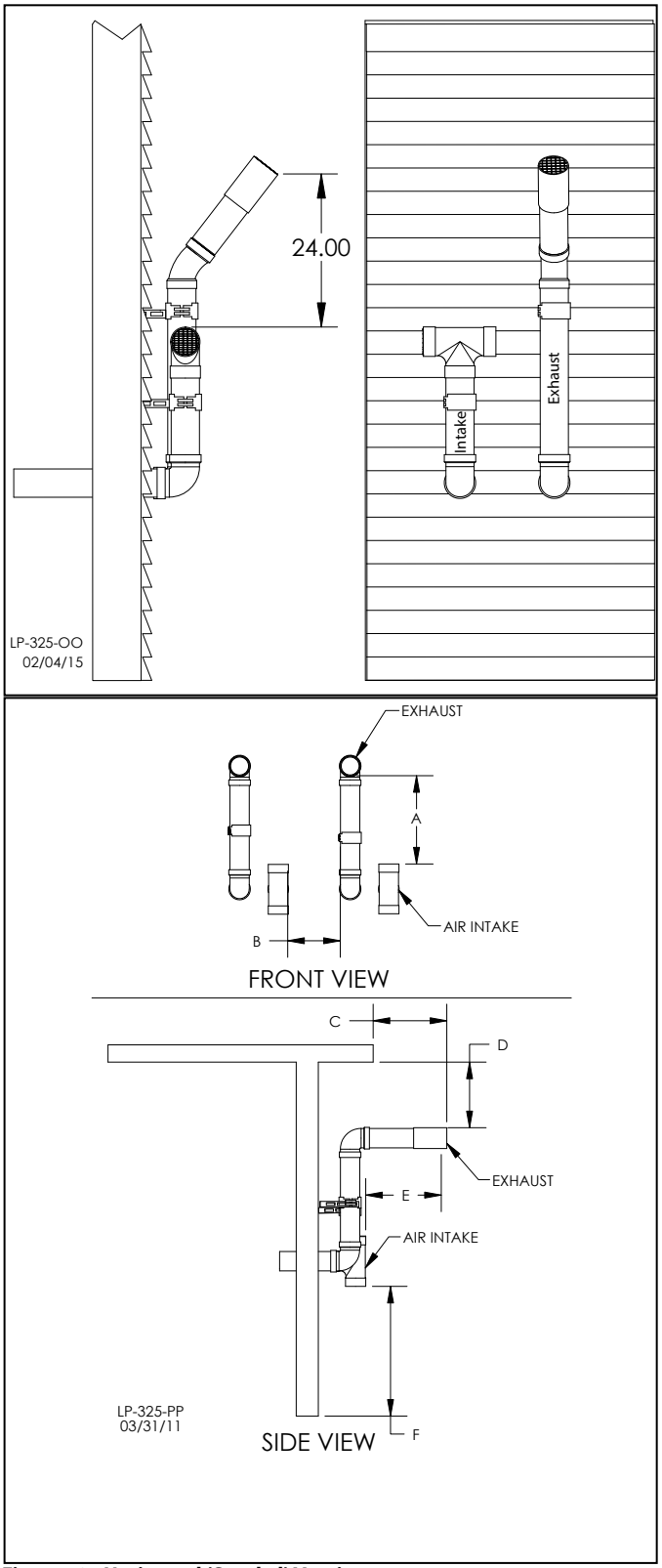


**Figure 10 - Horizontal (Snorkel) Venting**

**NOTES:**

A. For every 1" of overhang, the exhaust vent must be located 1" vertical below overhang (overhang means top of building structure and not two adjacent walls [corner of building]).

B. Typical installations require 12" minimum separation between bottom of exhaust outlet and top of air intake.

C. Maintain 12" minimum clearance above highest anticipated snow level or grade (whichever is greater).

D. Minimum 12" between vents when installing multiple vents.

E. 12" minimum beyond air intake.

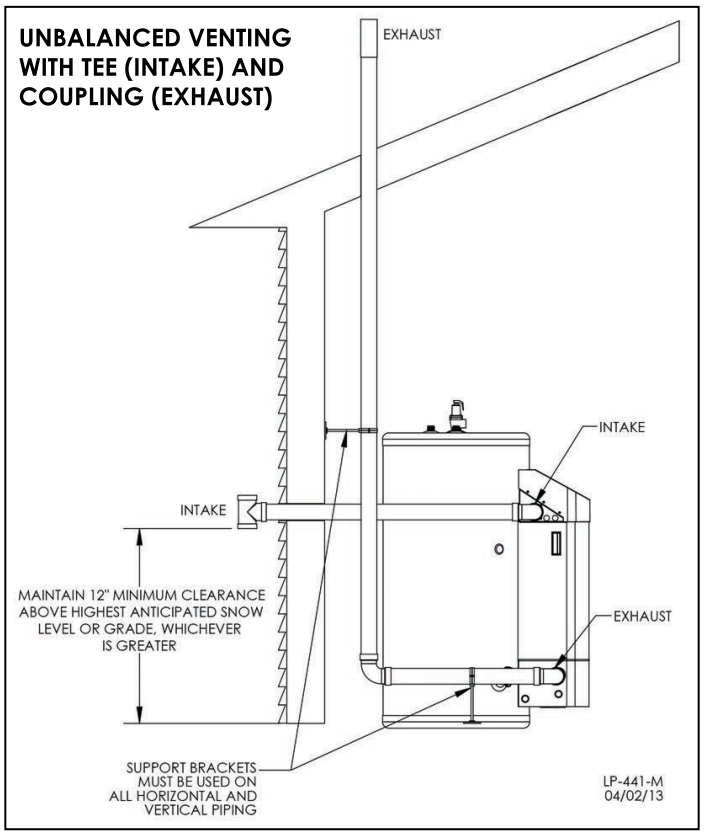


**Figure 11 - Unbalanced Venting - Roof Exhaust and Sidewall Intake**

**NOTE:** These drawings are meant to demonstrate system venting only. The installer is responsible for all equipment and detailing required by local codes.

**WARNING**

All vent pipes must be glued, properly supported, and the exhaust pitched a minimum of 1/4" per foot back to the heater to allow drainage of condensate. When placing support brackets on vent piping, the first bracket must be within 1 foot of the water heater and the balance of 4 foot intervals on the vent pipe. Venting must be readily accessible for visual inspection from the first three feet from the heater.

### 2. Venting Through an Existing System

This heater may be vented through an existing unused vent system. The inner diameter of the existing vent system is utilized for the combustion air source. Two methods have been approved for such venting: Concentric Venting Through an Existing System and Venting as a Chase.

| Vent / Air Inlet Size | Minimum Existing Vent / Chase Size |
|---|---|
| 2″ | 4″ |
| 3″ | 5″ |
| 4″ | 7″ |

**Table 10 - Minimum Existing Vent / Chase Sizing**

**DANGER**

Do not install the heater into a common existing vent with any other appliance. This will cause flue gas spillage or heater malfunction, resulting in substantial property damage, serious personal injury, or death.

**CAUTION**

Contractors must check state and local codes before installing through an existing vent opening. State and local codes always take precedence over manufacturer's instructions. Failure to check state and local codes before installing through an existing opening could result in property damage and add significantly to installation costs.

If an existing venting system is converted for use with this heater, the installer must ensure that the existing venting system is clean and free from particulate contamination that could damage the heater. Failure to do so could result in property damage and heater failure. Such failure IS NOT covered under warranty.

**Concentric Venting Through an Existing System**

NOTE: The following instructions refer only to venting through an existing vent system, and not to venting with HTP's optional concentric vent kits. Refer to Concentric Vent Kit installation manual (LP-166) for further information on venting with the optional concentric vent kits.

Concentric venting through an existing system must run vertically through the roof. See Table 10 for proper minimum vent sizing. Use only the approved venting materials specified in Table 5 for piping the system. All instructions listed in this Venting section apply. See Figures 12-1 and 12-2 for venting demonstrations.

**DANGER**

The upper and lower vent terminations as well as all joints in the venting system must be properly sealed to ensure that all combustion air is drawn properly and exhaust does not leak from the system. Failure to properly seal the venting system will result in property damage, serious personal injury, or death.

**Chase Venting Through an Existing System**

When venting as a chase, follow all instructions included in this Venting section, including those in the previous Concentric Venting Through an Existing System section. See Figure 12-3 for chase venting demonstration.

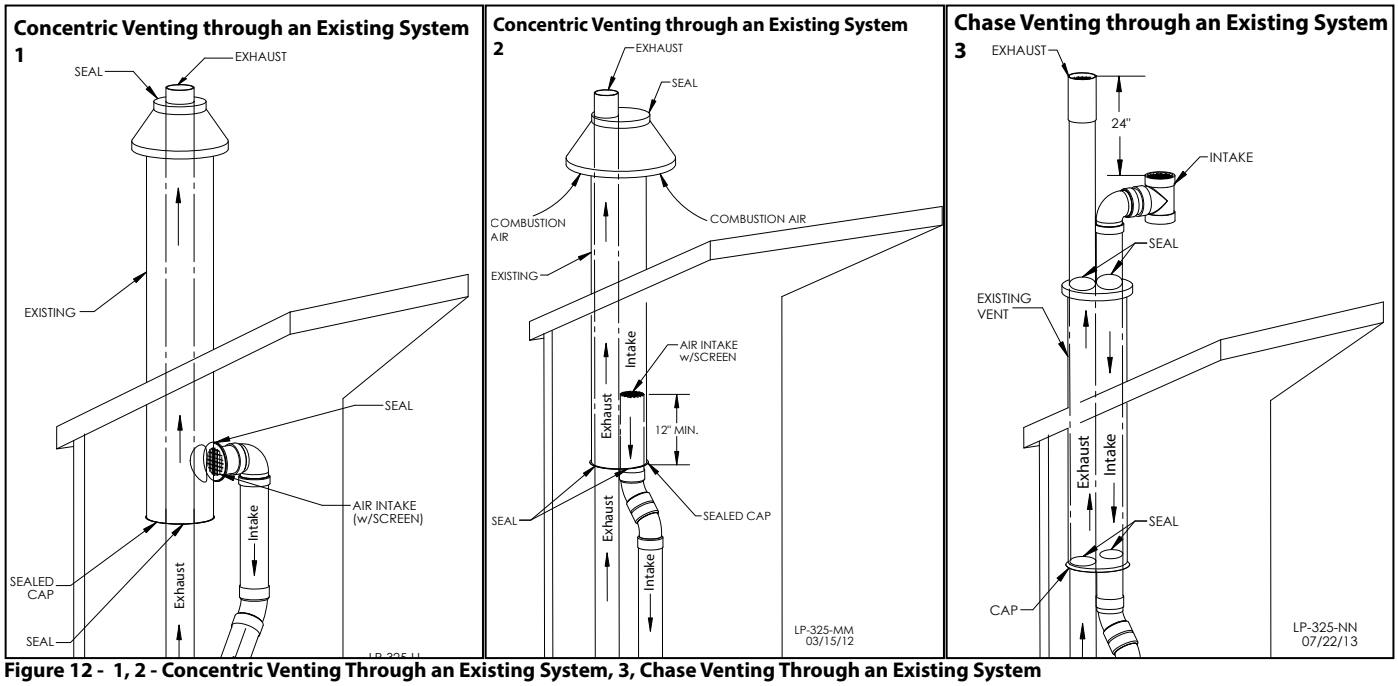


**Figure 12 - 1, 2 - Concentric Venting Through an Existing System, 3, Chase Venting Through an Existing System**

**NOTE:** These drawings are meant to demonstrate system venting only. The installer is responsible for all equipment and detailing required by local codes.

### 3. Power Venting, Indoor Combustion Air in Confined or Unconfined Space

This heater requires fresh, uncontaminated air for safe operation and must be installed in a mechanical room where there is adequate combustion and ventilating air. **NOTE: To prevent combustion air contamination, see Table 2.**

Combustion air from the indoor space can be used if the space has adequate area or when air is provided through a duct or louver to supply sufficient combustion air based on the water heater input. **Never obstruct the supply of combustion air to the water heater.** If the water heater is installed in areas where indoor air is contaminated (see Figure 13) it is imperative that the water heater be installed as direct vent so that all combustion air is taken directly from the outdoors into the water heater intake connection.

**Unconfined space** is space with volume greater than 50 cubic feet per 1,000 Btu/hour (4.8 cubic meters per kW) of the total input rating of all fuel-burning appliances installed in that space. Rooms connected directly to this space, through openings not furnished with doors, are considered part of the space.

**Confined space** is space with volume less than 50 cubic feet per 1,000 Btu/hour (4.8 cubic meters per kW) of the total input rating of all fuel-burning appliances installed in that space. Rooms connected directly to this space, through openings not furnished with doors, are considered part of the space.

When drawing combustion air from inside a conventionally constructed building to a confined space, such space should be provided with two permanent openings: one located 6" (15 cm) below the space ceiling, the other 6" (15cm) above the space floor. Each opening should have a free area of one square inch per 1,000 Btu/hr (22cm2/kW) of the total input of all appliances in the space, but not less than 100 square inches (645cm2).

If the confined space is within a building of tight construction, air for combustion must be obtained from the outdoors as outlined in the Venting section of this manual. See Figure 14.

**⚠ WARNING**

**Breathing Hazard - Carbon Monoxide Gas**

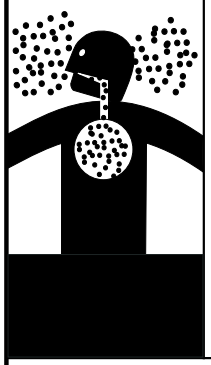

- Do not operate heater if flood damaged.
- Install vent system in accordance with local codes and manufacturers installation instructions.
- Do not obstruct heater air intake or exhaust. Support all vent piping per manufacturers installation instructions.
- Do not place chemical vapor emitting products near unit.
- According to NFPA 720, carbon monoxide detectors should be installed outside each sleeping area.
- Never operate the heater unless it is vented to the outdoors.
- Analyze the entire vent system to make sure that condensate will not become trapped in a section of vent pipe and therefore reduce the open cross sectional area of the vent.

**Breathing carbon monoxide can cause brain damage or death. Always read and understand instruction manual.**

LP-304

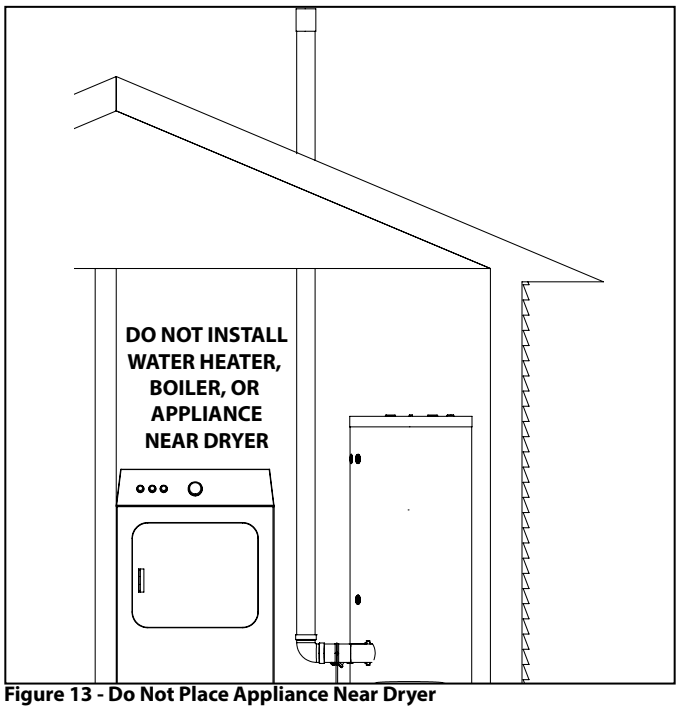


**Figure 13 - Do Not Place Appliance Near Dryer**

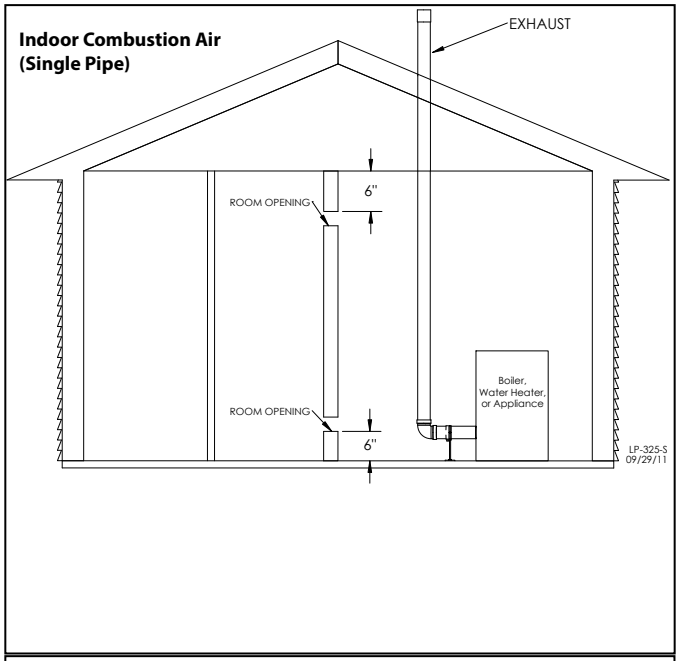


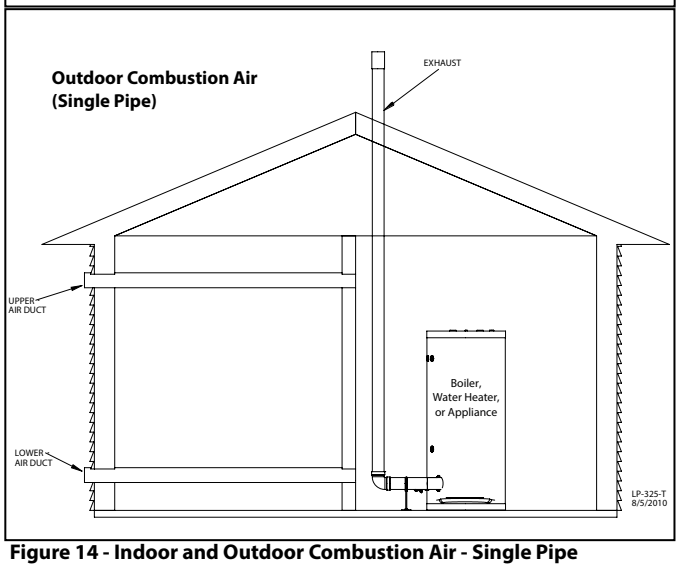


**Figure 14 - Indoor and Outdoor Combustion Air - Single Pipe**

## Part 6 - Condensate Removal

**NOTE:** Check with your local gas company to determine if combustion condensate disposal is permitted in your area. In the state of Massachusetts, condensate must be neutralized before entering a drain.

This condensing high efficiency water heater has a condensate removal system. Condensate is water vapor derived from combustion products, similar to that produced by an automobile when it is initially started. It is very important that the condensate line is sloped down away from the heater and to a suitable drain.

If the heater condensate outlet is lower than the drain, you must use a condensate removal pump (kit p/n 554200 available from HTP). If required by local authorities, a condensate filter of lime crystals, marble, or phosphate chips will neutralize slightly acidic condensate (p/n 7450P-212 available from HTP).

**CAUTION**

The condensate line must remain unobstructed. If allowed to freeze in the line or obstructed in any other manner, condensate can exit from the water heater tee, resulting in potential water damage to property. When installing a condensate pump, select one approved for use with condensing heaters and furnaces. The condensate pump should have an overflow switch to prevent property damage from spillage. Condensate from the heater will be slightly acidic (pH from 3.2 to 4.5). Install a neutralizing filter if required by local codes.

**WARNING**

Power to the optional condensate pump is continuous. When the water heater is powered off the condensate pump will remain on. It is important to remember to turn off the condensate pump when powering down the water heater. Failure to do so could result in property damage, severe personal injury, or death.

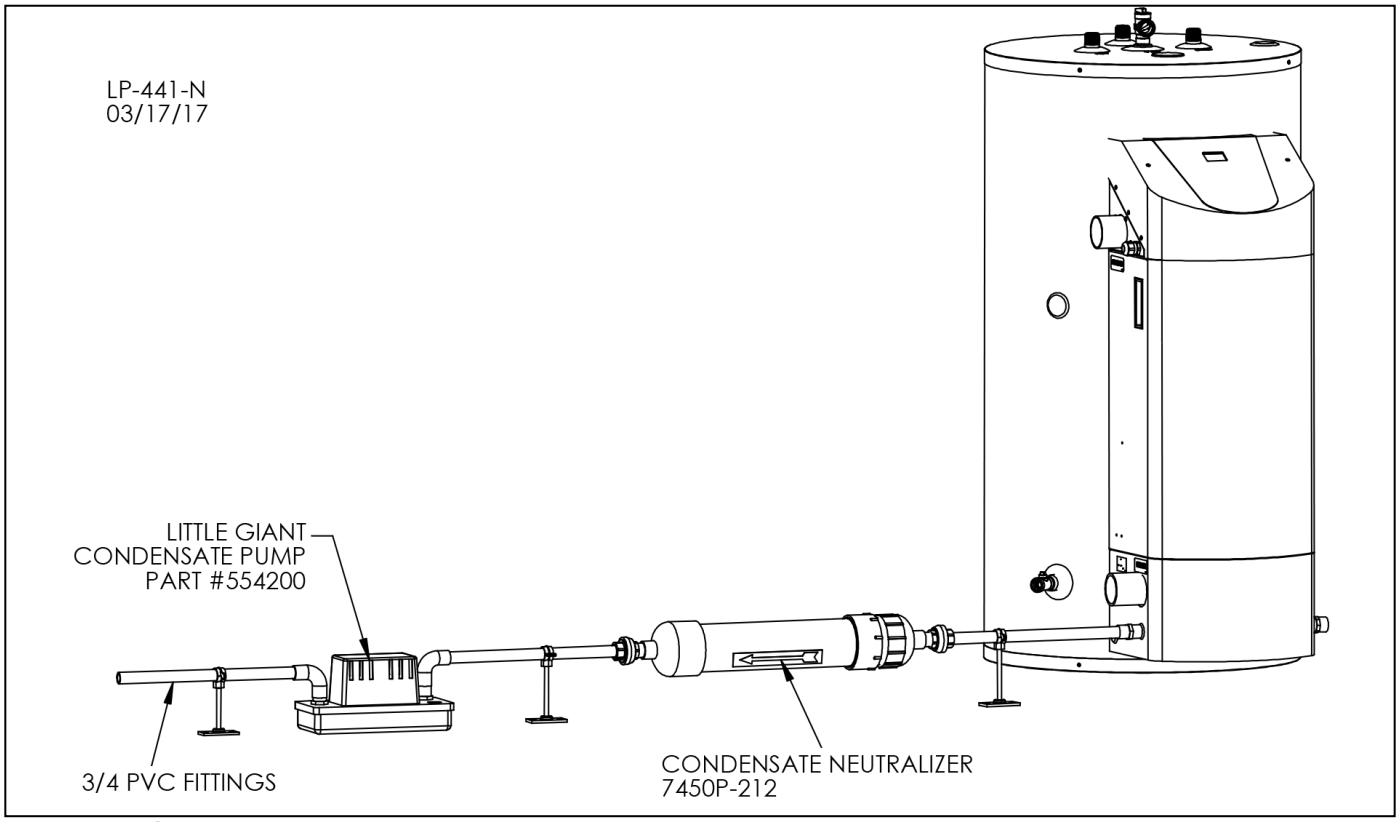


**Figure 15 - Condensate Piping**

**NOTES:**

1. Condensate line must be pitched at least ¼" per foot to properly drain. If this cannot be done, or a very long length of condensate hose is used, increase the condensate line to a minimum of 1" ID and place a tee in the line after the condensate neutralizer to properly reduce vacuum lock in the drain line.
2. PVC or CPVC pipe should be the only material used for condensate line. Steel, brass, copper, and other metals will be subject to corrosion or deterioration.
3. A frozen condensate line could result in a blocked vent condition. It is very important to protect the condensate line from freezing temperatures or any type of blockage. In installations that may encounter sustained freezing conditions, the use of heat tape is recommended to avoid freezing of the condensate line. It is also recommended to bush up the condensate line size to 1" and terminate condensate discharge as close to the unit as possible. Longer condensate runs are more prone to freezing. Damages due to frozen or blocked condensate lines ARE NOT covered by warranty.
4. Support of the condensate line may be necessary to avoid blockage of the condensate flow.

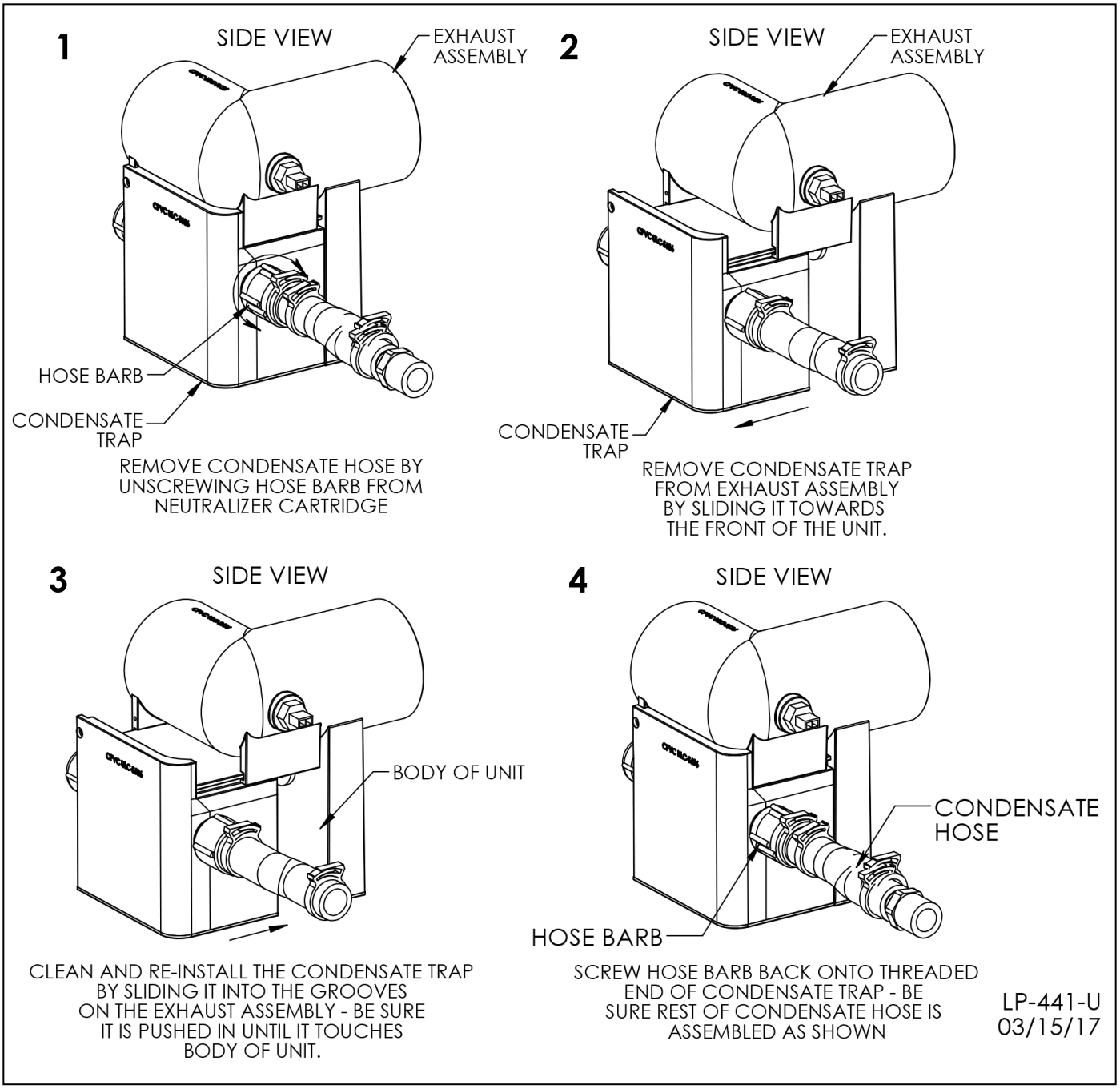


**Figure 16 - Removing and Installing the Condensate Neutralizer - Water Heaters Manufactured Prior to 9/27/17 ONLY**

## Part 7 - Wiring

**WARNING**

To avoid electrical shock, turn off all power to the heater prior to opening an electrical box within the unit. Ensure the power remains off while any wiring connections are being made. Failure to follow these instructions could result in component or product failure, serious injury, or death. Such product failure IS NOT covered by warranty.

Jumping out control circuits or components WILL VOID product warranty and can result in property damage, personal injury, or death.

### A. Line Voltage Input

The heater is equipped with a three prong power cord. The heater is limited to a maximum of 8 amps at 120 volts in use.

1. This water heater must be properly grounded. Ensure the electrical receptacle is properly grounded. Do not remove the grounding prong from the water heater plug.
2. Do not attach the ground wire to either the gas or water piping.

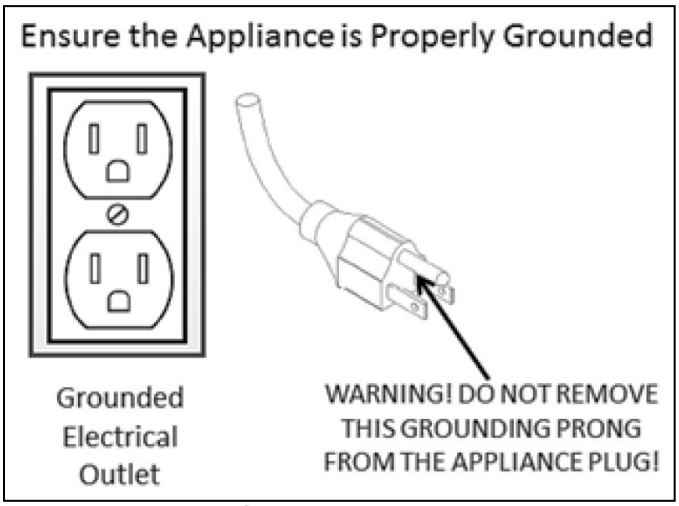


**Figure 17 - Proper Grounding**

3. The wiring diagrams in this manual are to be used for reference purposes only. Refer to these diagrams and the wiring diagrams of any external controls used with the installation when wiring the water heater. Read, understand, and follow all wiring instructions supplied with the controls.
4. Do not disconnect the power supply when the water heater is in normal operation.

**NOTE:** For additional electrical protection, the use of a whole house surge protector is recommended. Damage caused by power surges IS NOT covered by the warranty.

**NOTE:** If the water heater display does not turn on, first check the plug. Then check the electrical panel circuit breaker and reset if necessary. If the circuit breaker trips again, do not reset. Disconnect the plug and have a qualified technician diagnose the problem.

### B. Line Voltage Condensate Input

The heater has the capability of supplying power to a condensate pump. The connection is 115 VAC + 10% / - 15% at a max of 2 amps. Power is supplied to the pump only when the heater is connected to power, and the power switch is in the on position.

### C. Low Voltage Outdoor Sensor Input

The heater has the capability of an outdoor reset. Connecting an outdoor sensor allows the heater to operate at optimum efficiency. HTP offers an outdoor sensor, p/n 7250P-319.

The outdoor sensor must be a 12K NTC sensor. Use a minimum 22 AWG wire for runs of 100 feet or less and minimum 18 AWG wire for runs up to 150 feet. Instructions are included with the outdoor sensor to correctly mount the sensor on the exterior surface of the building. It is preferable to mount the sensor on the north side in an area that will not be affected by direct sunlight but will be exposed to varying weather conditions. Connect the outdoor sensor to terminals marked "Outdoor".

**WARNING**

It is of extreme importance that this unit be properly grounded. It is very important that the building system ground is inspected by a qualified electrician prior to making this connection. Electrical power must only be turned on when the heater is completely filled with cold water. Failure to follow these instructions could result in component or product failure, serious injury, or death.

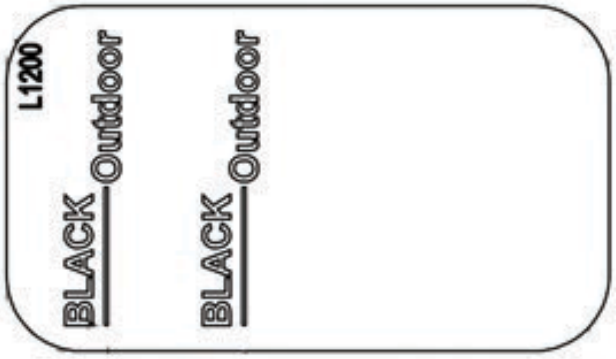


**Figure 18 - Low Voltage Wiring**

**CAUTION**

Label all wires prior to disconnecting them when servicing the heater. Wiring errors can cause improper and dangerous operation. Failure to follow these instructions may result in property damage or personal injury.

### D. Internal Wiring Diagram

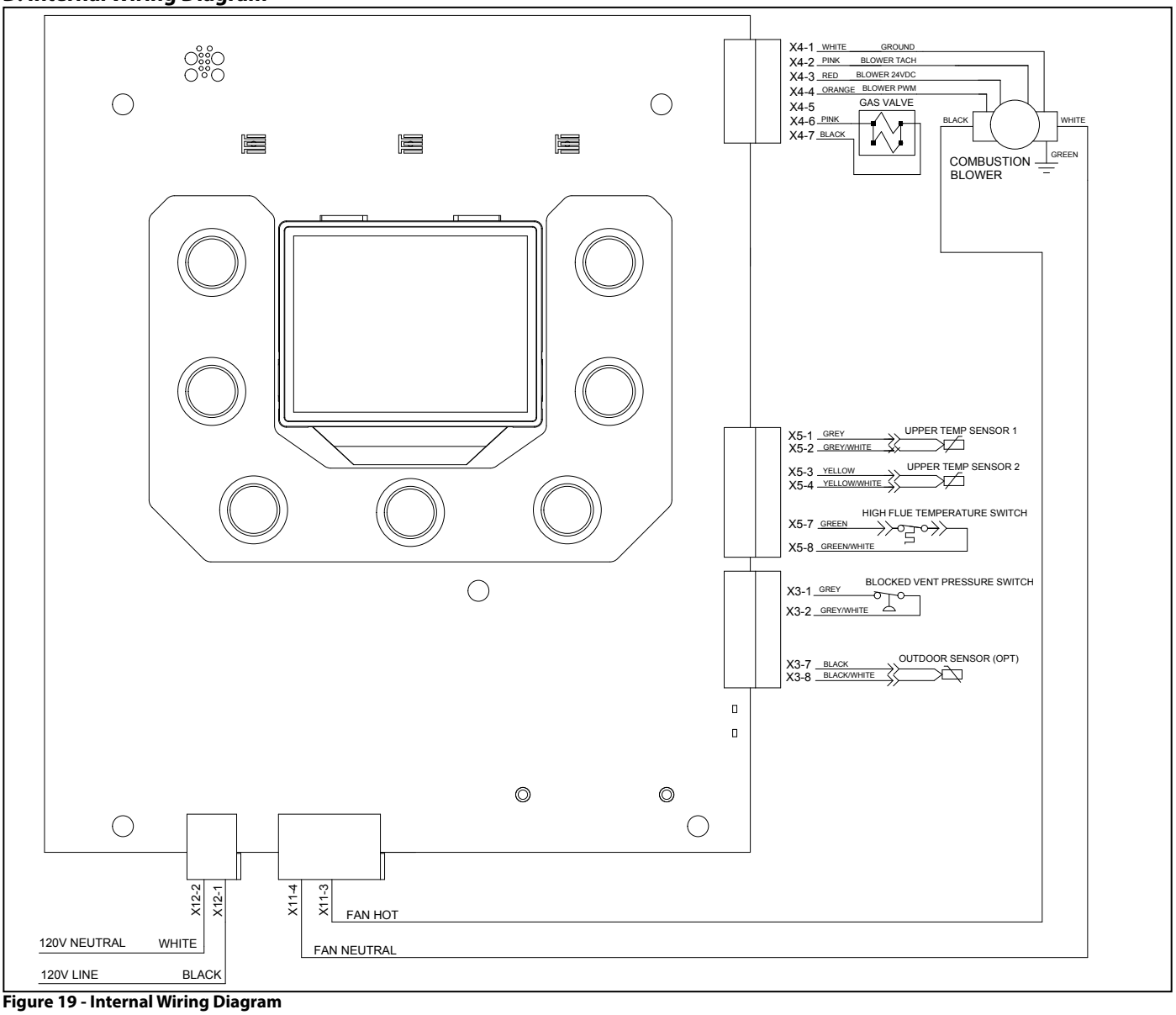


**Figure 19 - Internal Wiring Diagram**

## Part 8 - Gas Connections

**WARNING**

Failure to follow all precautions could result in fire, explosion, severe injury, or death.

Ensure the gas on which the water heater will operate is the same type specified on the rating plate. Failure to do so could result in water heater malfunction, property damage, personal injury, or death.

The gas supply shall have a minimum of no less than 3.5" water column, a maximum inlet pressure of no greater than 14" water column (350 mm), and ½ pound pressure (3.5 kPa). The entire piping system, gas meter, and regulator must be sized properly to prevent excessive pressure drop (greater than 0.5" WC) as stated in the National Fuel Gas Code. This information is listed on the rating plate.

It is very important that the water heater is connected to the gas type noted on the rating plate: "LP" for liquefied petroleum, propane gas, or "Nat" for natural or city gas. All gas connections must be approved by the local gas supplier or utility, in addition to the governing authority, prior to turning the gas supply on.

If the water heater experiences a pressure drop greater than 1" WC, the meter, regulator, or gas line is undersized or in need of service. A manometer can be attached to the incoming gas drip leg by removing the cap. The gas pressure must remain between 3.5" and 14" WC during stand-by (static) mode and while in operating (dynamic) mode at full output.

If an in-line regulator is used, it must be installed a minimum of 10 feet from the heater. It is very important that the gas line is properly purged by the gas supplier or utility. Improper line sizing or failure to properly purge the lines will result in ignition failure. This problem is especially noticeable in NEW LP installations, in empty tank situations, or when a utility company shuts off service to an area to maintain supply lines.

Once all inspections have been performed, the piping must be leak tested. If the leak test requirement is a higher test pressure than the maximum gas inlet pressure, isolate the heater from the gas line to continue leak testing. To do this, turn off the factory and field-installed gas cocks. Failure to do so may damage the gas valve.

In the event the gas valve is exposed to a pressure greater than ½ PSI, 14" water column, the gas valve must be replaced. The gas valve must not be replaced with a conventional gas valve under any circumstances. As an additional safety feature, the gas valve in this

water heater has a flanged connection to the swirl plate and blower.

**⚠ WARNING**

UL recognized fuel gas detectors are recommended in all enclosed propane and natural gas applications where there is a potential for an explosive mixture of fuel gas to accumulate. The installation of these detectors should be made in accordance with the detector manufacturer's recommendations, and/or local laws. Failure to install fuel gas detectors in these applications could result in fire, explosion, property damage, severe personal injury, or death.

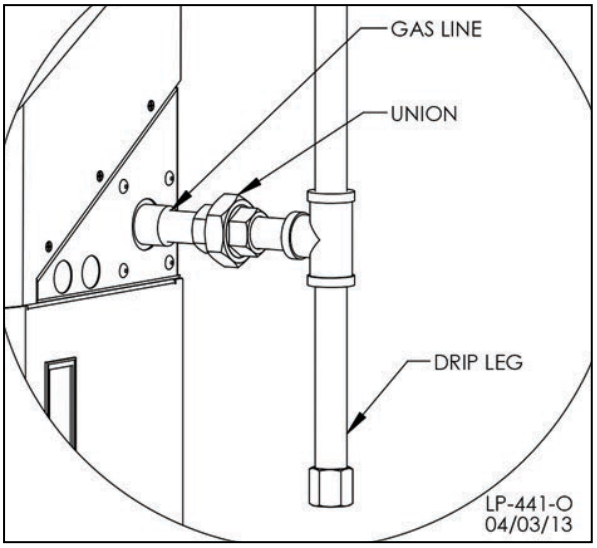


**Figure 20 - Gas Connection**

## A. Gas Pipe Sizing Tables

### 1. Gas Pipe Sizing

This information is for reference use only. Refer to gas pipe manufacturer specifications for actual delivery capacity. The DOE standard for Natural Gas is 1100 BTU/ft$^3$. Contact the local gas supplier for actual BTU/ft$^3$ rating.

### 2. Natural Gas Pipe Sizing

The following table lists maximum capacity of pipe in cubic feet of gas per hour for gas pressures of 14" or less and a pressure drop of 0.5 inches water column, based on a 0.60 specific gravity for natural gas.

| Pipe Size (in.) | Length of Pipe (Feet) | | | | | | | | | | BTU's Per Hour x 1,000 |
|---|---|---|---|---|---|---|---|---|---|---|---|
| | 10 | 20 | 30 | 40 | 50 | 60 | 80 | 100 | 150 | 200 | |
| 1/2 | 172 | 118 | 95 | 81 | | | | | | | Schedule 40 Metallic Pipe (0.60 Specific Gravity, 0.5 WC Pressure Drop) |
| 3/4 | 360 | 247 | 199 | 170 | 151 | 137 | 117 | 104 | 83 | | |
| 1 | 678 | 466 | 374 | 320 | 284 | 257 | 220 | 195 | 157 | 134 | |
| 1 1/4 | 1390 | 957 | 768 | 657 | 583 | 528 | 452 | 400 | 322 | 275 | |
| 1 1/2 | 2090 | 1430 | 1150 | 985 | 873 | 791 | 677 | 600 | 482 | 412 | |
| 2 | 4020 | 2760 | 2220 | 1900 | 1680 | 1520 | 1300 | 1160 | 928 | 794 | |
| 3 | 11300 | 7780 | 6250 | 5350 | 4740 | 4290 | 3670 | 3260 | 2610 | 2240 | |
| 4 | 23100 | 15900 | 12700 | 10900 | 9660 | 8760 | 7490 | 6640 | 5330 | 4560 | |

**Table 11 - Natural Gas Delivery Capacity - Refer to ANSI Z223.1 - National Fuel Gas Code, Latest Edition**

### 3. LP (Liquid Propane) Gas Pipe Sizing

Contact gas supplier to size pipes, tanks, and 100% lockup gas pressure regulator. Adjust propane supply regulator provided by the gas supplier for 14 inches w.c. maximum pressure.

## B. Gas Piping Requirements

**⚠ WARNING**

Support gas supply piping with hangers, not by the heater or its accessories. The heater gas valve and blower will not support the weight of the piping. Make sure the gas piping is protected from physical damage and freezing, where required. Failure to follow these instructions could result in gas leakage, fire, explosion, property damage, severe personal injury, or death.

Do not use Teflon tape on gas line pipe thread. Use a pipe compound rated for use with natural and propane gases. Apply sparingly on male pipe ends, leaving the two end threads bare. Failure to follow these instructions could result in gas leakage, fire, explosion, property damage, severe personal injury, or death.

1. The gas connection fitting on the water heater is 1/2" NPT. **NOTE:** The gas supply pipe size must not be less than 1/2".
2. The supply line must be sized for the maximum output of the water heater being installed. If there are additional gas appliances on the main supply line, size the supply line for the maximum total COMBINED BTU/Hr draw of the appliances. This will ensure the supply line is sized to allow all the appliances to operate at the same time.
3. Measure the length of the gas supply line from the gas meter to the water heater. The water heater must be installed downstream of the gas meter to ensure adequate gas supply.
4. Use the table in this manual or refer to the gas line manufacturer's sizing information to determine the correct supply pipe size. Run the gas supply line in accordance with all applicable codes.
5. The National Fuel Gas Code (NFPA 54) requires that a sediment trap (drip leg) be installed in the gas line on appliances not so equipped. The drip leg must be accessible, a minimum of 3" in length, and not subject to freezing conditions. See Figure 20.
6. A manual gas shut-off valve should be installed in the gas supply line close to the water heater. Locate and install manual shutoff valves in accordance with local and state requirements.
7. To facilitate any future maintenance, it is also recommended that an approved gas union fitting be installed in the supply line between the shut-off valve and the 1/2" NPT connection on the water heater.
8. Use a manometer to test the gas pressure to make sure it meets the minimum standards and does not exceed the maximum standards of the water heater.
9. Leak test the gas line pipe before placing the water heater in operation. Only use approved leak detector liquid solutions to check for leaks. Never use an open flame to check for leaks.

### C. Gas Valve

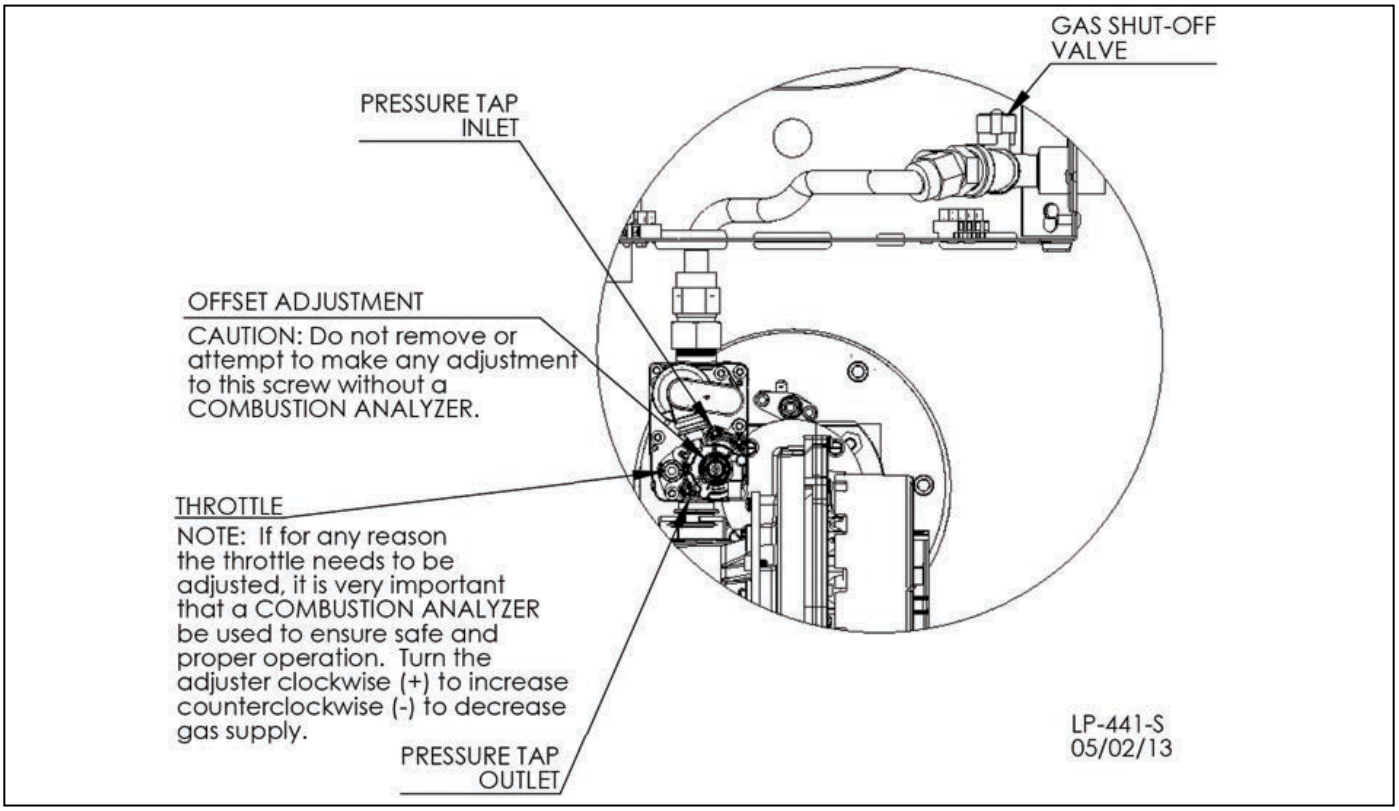


**Figure 21 - Gas Valve**

**⚠ WARNING**

Strain on the gas valve and fittings may result in vibration, premature component failure and gas leakage, and cause fire, explosion, property damage, severe personal injury, or death.

Adjustments to the throttle screw or offset may only be made by a qualified gas technician using a calibrated combustion analyzer capable of measuring CO2 and CO. Failure to follow this instruction could result in fire, explosion, property damage, severe personal injury, or death.

### D. Checking Gas Pressure at the Water Heater for Proper Operation

**NOTE:** Refer to Figure 21 when checking gas pressure.

1. The water heater and its individual shutoff valve must be disconnected from the gas supply piping system during any pressure testing of the system at pressures greater than ½ psi (3.5 kPa).
2. The water heater must be isolated from the gas supply piping system by closing its individual manual shutoff valve during any pressure testing of the gas supply piping system at test pressures equal to or less than ½ psi (3.5 kPa). Loosen the screw on the pressure tap inlet to attach a manometer and check the gas inlet pressure.

The minimum and maximum inlet gas line pressures must meet the requirements shown in Table 12.

| Natural or LP Gas | |
|---|---|
| Minimum Pressure | 3.5"WC |
| Maximum Pressure | 14"WC |

**Table 12 - Gas Pressure Requirements**

**NOTICE**

Do not fire (operate) the water heater until all connections have been completed and the heat exchanger is filled with water. Doing so will damage the water heater and void the warranty.

**⚠ WARNING**

**Breathing Hazard - Carbon Monoxide Gas**

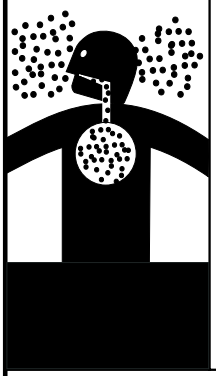

- Do not operate heater if flood damaged.
- Install vent system in accordance with local codes and manufacturers installation instructions.
- Do not obstruct heater air intake or exhaust. Support all vent piping per manufacturers installation instructions.
- Do not place chemical vapor emitting products near unit.
- According to NFPA 720, carbon monoxide detectors should be installed outside each sleeping area.
- Never operate the heater unless it is vented to the outdoors.
- Analyze the entire vent system to make sure that condensate will not become trapped in a section of vent pipe and therefore reduce the open cross sectional area of the vent.

**Breathing carbon monoxide can cause brain damage or death. Always read and understand instruction manual.**

LP-304

## Part 9 - Controls

### A. Control and Display Overview

**Detailed Description of Button Functions**

**1. Adjust Setting Down**

**2. Adjust Setting Up**

**3. Decreases the User Setpoint**

**4. Increases the User Setpoint**

**5. ECO Mode**

**6. RESET**

**7. OFF / Mode Enable**

**Detailed Description of Control Functions**

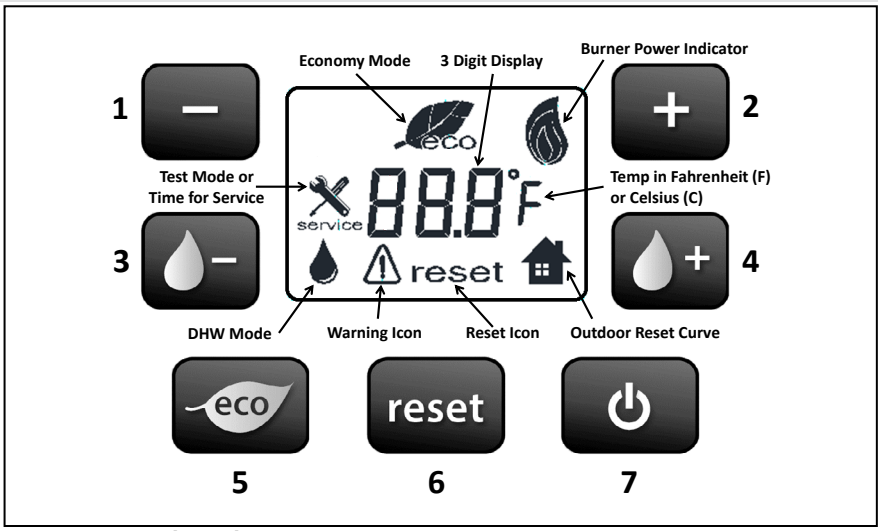


**Figure 22 - Control Detail**

| Modes of Operation | | | |
|---|---|---|---|
| **Mode** | **Screenshot** | **Description** | **Range (Default)** |
| **Off** | OFF | The water heater will ignore heat demands while in Off Mode.<br>To put the water heater in Off Mode, press ⏻. | **Off / On (Off)** |
| **Stand-By** | 120°F | In Stand-By Mode, the fan is off, the gas valve is closed and the water inlet shut-off valve is opened. The water heater goes into Stand-By Mode when it is powered but not firing. | **On Winter / On Summer / Off (Off)** |
| **User Setpoint** | 120°F | The User Setpoint is used to set the temperature for the water heater.<br>Press either − or + once to change the User Setpoint. The normal operation screen will clear and be replaced by a flashing number. This is the User Setpoint.<br>Press − to decrease or + to increase the User Setpoint in increments of two degrees. After choosing the setpoint, wait five seconds. The screen will return to normal operation and the setpoint will be stored. | **70 - 160 (120)** |
| **Outdoor Reset Curve** | 120°F | Enabling Outdoor Reset Curve allows the user to set additional parameters to increase water heater efficiency.<br>An Outdoor Sensor is required to set Outdoor Reset Curve.<br>See Advanced Control Functions to set the Outdoor Reset Curve. | **0 = Enabled, 1 = Disabled (0)** |
| **ECO** | 120°F | Putting the water heater into ECO Mode reduces the maximum firing rate to 80% of the rated maximum firing rate. This increases water heater efficiency in times of low water heater demand.<br>Press eco to put the water heater into ECO Mode. Press again to return to normal operation. | **ECO On / Off (Off)** |
| **Test** | 250 | Test Mode allows the installer to test water heater operation by running the fan at different speeds. To enter Test Mode, press − and + together for 5 seconds.<br>Push − to decrease or push + to increase fan speed by 50 RPM increments. Push + to operate at maximum fan speed. Push − to operate at minimum fan speed.<br>Test Mode will exit automatically after 15 minutes. Press reset to leave Test Mode manually. | **Test Mode On / Off (Off)** |
| **Lockout Fault Codes** | F07<br>reset | Lockout codes refer to a temporary condition that must be cleared to resume operation. If code persists, the heater should be serviced by a qualified service technician. | **Press reset to clear the code. Observe operation to ensure code does not reoccur.** |

| | | | |
|---|---|---|---|
| **Blocking Error Codes** | E 13 ⚠ | Blocking codes temporarily stop water heater operation until the error condition clears. Once the condition clears, the error will disappear and the water heater will resume operation. The error will also be written into the water heater's history data. | **Water heater operation resumes when conditions return to normal.** |
| **Installer** | tS | The Installer Mode allows installers to view history hidden from the user. See Advanced Control Functions for information on how to use this Mode. | **Installer Mode On / Off (Off)** |
| **NOTE: ⚠ is a high temperature warning. This appears on the display when setpoint or actual water temperature is above 125°F. Water temperature over 125°F can instantly cause severe burns or death from scalds. Children, disabled, and elderly are at the highest risk of being scalded.** | | | |

**Table 13 - Water Heater Modes of Operation**

## B. Basic Control Functions

There are a number of parameters accessible from the water heater main screen. These parameters are especially useful for the main user of the water heater.

**NOTE:** These parameters ARE NOT ACCESSIBLE when the control is in a blocking or lockout state.

**1. Turning the Water Heater On / Off**

Press ⏻ to turn the water heater on and off.

**2. Resetting the Water Heater**

Press reset to clear a fault code lockout and resume water heater operation.

**3. Putting the Water Heater in ECO Mode**

Press eco to put the water heater in ECO Mode. Press eco to resume normal operation.

**4. Changing User Setpoint**

Press either 💧− or 💧+ once to change the User Setpoint. The normal operation screen will clear and be replaced by a flashing number. This is the User Setpoint.

Press 💧− to decrease or 💧+ to increase the User Setpoint in increments of two degrees. The default setpoint is 120ºF. The setpoint range is 70 - 160ºF. After choosing the setpoint, wait five seconds. The screen will return to normal operation and the setpoint will be stored.

## C. Advanced Control Functions

The water heater control Installer Mode includes numerous parameters for system customization. These parameters should only be accessed and changed by a qualified service technician.

**⚠ WARNING**

Installer Mode Parameters should only be accessed and changed by a qualified service technician. Failure to follow this warning could result in improper water heater operation, premature water heater or component failure, and/or excessively high temperatures that could result in scalding, property damage, severe personal injury, or death.

**NOTE:** Water heater failures caused by improper Installer Mode Parameter sets WILL VOID product warranty.

To enter Installer Mode, press and hold reset for five seconds. When the following screen appears Installer Mode is active.

tS

**1. Upper Level Control Functions**

See the drawing below for information on how to navigate the Installer Menu Upper Level.

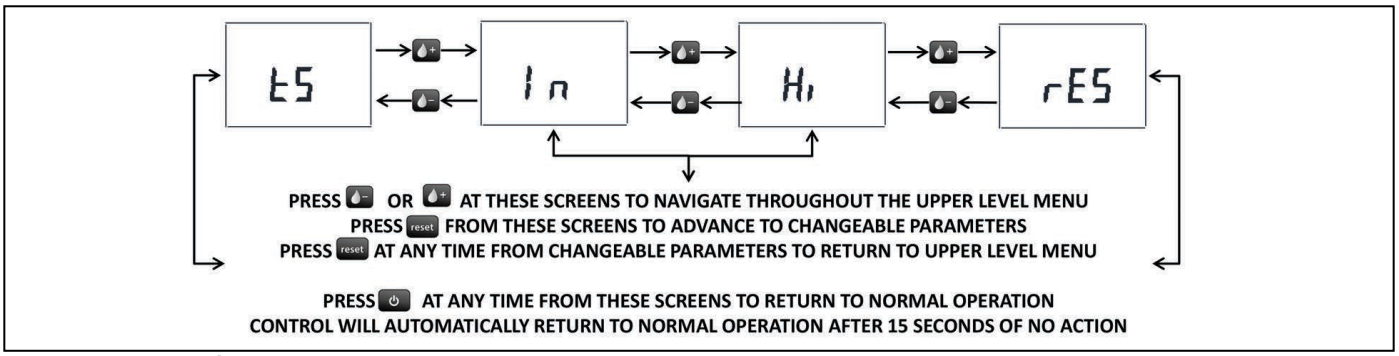


**Figure 23 - Upper Level Navigation**

**2. Technical Service and Navigation**

The Technical Service Menu (tS) is the initial menu to appear when entering Installer Mode. Technical Service Parameters allow the installer to fully customize water heater settings to the system.

To enter Installer Mode, press and hold reset for five seconds. When the tS screen appears Installer Mode is active. Press reset at this screen to access the Technical Service Parameter codes (P00, P01, etc.)

Press + to advance through the parameters. Press − to return to the previous parameter. To change parameter value, press − or + once. The value will appear. Press − to decrease or + to increase the value. Press reset at this screen to accept the changed value and return to the Technical Services Parameters.

Press reset at any Technical Services Parameter code screens to return to the upper level menu. The following table details the Technical Service Parameters in sequential order.

| Code | Short Description | Long Description | Range (Default) |
|---|---|---|---|
| P00 | User Setpoint (ºF) | Minimum Tank Temperature | 70-160 **(120)** |
| P01 | Temperature Differential (ºC/ºF) | Difference Between Actual Tank Temperature and User Setpoint that will Initiate Demand | 4-20 **(8)** |
| P02 | Maximum Power Percentage (0%) | Maximum Combustion System Power | 50-100 **(80)** |
| P03 | Temperature Unit Displayed | Fahrenheit or Celsius | 0 = ºC / 1 = ºF **(1)** |
| P04 | ECO Mode | Economy Mode | 0 = Off / 1 = On **(0)** |
| P05 | Outdoor Reset Curve | Turns on the Outdoor Reset Curve **NOTE:** The following parameters are applicable only if the Outdoor Reset Curve is turned on. | 0 = Off / 1 = On **(0)** |
| P06 | Minimum Outdoor Temperature (ºC/ºF) | Minimum outdoor design conditions for reset curve | 10-70 **(10)** |
| P07 | Maximum Outdoor Temperature (ºC/ºF) | Maximum outdoor design conditions for reset curve | 10-70 **(68)** |
| P08 | Minimum Storage Temperature (ºC/ºF) | Minimum tank temperature for reset curve | 70-160 **(120)** |
| P09 | Maximum Storage Temperature (ºC/ºF) | Maximum tank temperature for reset curve | 70-160 **(140)** |
| P10 | Warm Weather Shutdown Temperature (ºC/ºF) | Outdoor temperatures greater than this value return the tank target temperature to the User Setpoint | 50-100 **(68)** |

**Table 14 - Technical Service Parameters - NOTE: Temperature Readings Depend on Temperature Unit Selection**

## D. Outdoor Reset

This unit is supplied with outdoor reset wire connection terminals. **When an outdoor sensor (p/n 7250P-319) is connected, operation of the unit immediately changes.** Refer to the following steps to properly set up the unit with an outdoor sensor.

**⚠ WARNING**

An ASSE 1017 thermostatic mixing valve MUST be installed when using outdoor reset. Failure to do so could result in substantial property damage, severe personal injury, or death.

1. Connect the outdoor sensor to the terminals marked "outdoor".
2. Press reset at this screen to access the Technical Service Parameters codes (P00, P01, etc.).
3. Press + to advance through the parameters. Press − to return to the previous parameter.
4. Go to P06.
5. Enter desired MIN Outdoor Temp value.
6. Press + to advance to the next parameter.
7. To change parameter value, press − or + once. The value will appear. Press − to decrease or + to increase the value. 8. Enter desired MAX Outdoor Temp value
9. Press + to advance to the next parameter.
10. Enter desired MIN Storage Temp value
11. Press + to advance to the next parameter.
12. Enter desired MAX Storage Temp value

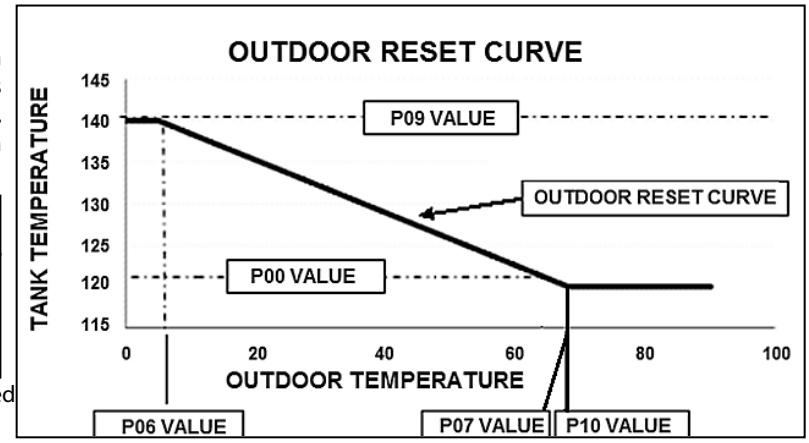


**Figure 24 - Outdoor Reset Curve**

13. Press reset at this screen to accept the changed value and return to the Installer Parameters.
14. Press reset at any Installer Parameter code screens to return to the upper level menu.

**1. Inquiry Mode and Navigation**

Inquiry Mode (In) allows the installer to access water heater operating specifics, including temperature sensor and flame sensor readings. These readings aid the installer in troubleshooting the water heater.

To enter Installer Mode, press and hold reset for five seconds. When the tS screen appears Installer Mode is active. Press + once to reach Inquiry Mode. The control is ready to access the Inquiry Mode when the In screen appears on the display.

Press reset at this screen to access the Inquiry Mode codes (i00, i01, etc.) To view code value, press − or + once. The value will appear.

Press reset at this screen to return to the code screen.

Press to advance through the codes. Press to return to the previous code.

Press reset at any Inquiry Mode code screens to return to the upper level menu.

The following table details Inquiry Mode codes in sequential order.

| Code | Description | Range |
|---|---|---|
| i00 | Upper (HL NTC1) Sensor Temperature (ºC/ºF) | 32 - 257 ºF |
| i01 | (--*) | --* |
| i02 | Ventilation Sensor Temperature (ºC/ºF) | 32 - 257 ºF |
| i03 | Outdoor Sensor Temperature (ºC/ºF) | 32 - 257 ºF |
| i04 | Actual Flame Current (uA x 10)<br>Ex: If 240 is displayed, uA is 24<br>Min. uA is 0.4 (4 on display) | 0 - 999 |
| i05 | Firmware Version | Custom Version C_x.xx |
| i06 | DHW Setpoint (If Outdoor Reset is Enabled) | P08 - P09 |
| i07 | Actual Fan Speed | RPM X 10 |

**Table 15 - Inquiry Mode Codes - NOTE: Temperature Readings Depend on Temperature Unit Selection - *NOTE: Means option is not available or in use.**

### 2. History Mode and Navigation

History Mode ( Hi ) aids the installer in troubleshooting by allowing access to the last eight (8) error or fault codes that have occurred.

To enter Installer Mode, press and hold reset for five seconds. When the tS screen appears Installer Mode is active. Press twice to reach History Mode. The control is ready to access the History Mode when the Hi screen appears on the display.

Press reset at this screen to access the History Mode codes (H00, H01, etc.) To view code value, press − or + once. The value will appear.

Press reset at this screen to return to the code screen.

Press to advance through the codes. Press to return to the previous code.

Press reset at any History Mode code screens to return to the upper level menu.

The following table details History Mode codes in sequential order.

| Code | Description |
|---|---|
| H01 | Most Recent Error or Fault Code |
| H02 | Second Most Recent Error or Fault Code |
| H03 | Third Most Recent Error or Fault Code |
| H04 | Fourth Most Recent Error or Fault Code |
| H05 | Fifth Most Recent Error or Fault Code |
| H06 | Sixth Most Recent Error or Fault Code |
| H07 | Seventh Most Recent Error or Fault Code |
| H08 | Eighth Most Recent Error or Fault Code |

**Table 16 - History Mode Codes - NOTE: Temperature Readings Depend on Temperature Unit Selection**

### 3. Reset Mode and Navigation

Reset Mode ( rES ) allows the installer to reset and clear water heater history. This is especially helpful after troubleshooting or repairs have concluded.

To enter Installer Mode, press and hold reset for five seconds. When the tS screen appears Installer Mode is active. Press three times to reach Reset Mode. The control is ready to access the Reset Mode when rES the screen appears on the display.

Press at this screen for five seconds to reset the water heater history.

Press to return to History Mode. View the history to ensure it has been cleared.

Press reset at any History Mode screens to return to the upper level menu.

## Part 10 - Start-Up Procedure

**WARNING**

**FOR YOUR OWN SAFETY READ BEFORE OPERATING**

1. This water heater does not have a pilot. It is equipped with an ignition device which automatically lights the burner. Do not try to light the burner by hand.
2. BEFORE OPERATING: Smell all around the water heater area for gas. Be sure to smell next to the floor because some gas is heavier than air and will settle on the floor.

**WHAT TO DO IF YOU SMELL GAS**

- Do not try to light any water heater.
- Do not touch any electric switch, do not use any phone in your building.
- Immediately call your gas supplier from a neighbor's phone. Follow the gas suppliers' instructions.
- If you cannot reach your gas supplier, call the fire department.
- Turn off the gas shutoff valve (located outside the water heater) so that the handle is crosswise to the gas pipe. If the handle will not turn by hand, don't try to force or repair it, call a qualified service technician. Force or attempted repair may result in a fire or explosion.

4. Do not use this water heater if any part has been under water. Immediately call a qualified service technician to inspect the water heater and to replace any part of the control system and any gas control that has been damaged.
5. The water heater shall be installed so the gas ignition system components are protected from water (dripping, spraying, rain, etc.) during water heater operation and service (circulator replacement, condensate trap, control replacement, etc.)

Failure to follow these instructions could result in property damage, serious personal injury, or death.

### A. Operating Instructions

If you smell gas, STOP. Follow listed safety instructions above. If you do not smell gas, follow the next steps.

1. Make sure tank is full with cold water and purge all piping. To assure adequate piping, open all hot water faucets.

**WARNING**

Ensure the water heater is full of water before firing the burner. Failure to do so will damage the heater. Such damage IS NOT covered by warranty, and could result in property damage, serious personal injury, or death.

2. Turn on all electric power to water heater.
3. Remove the Front Panel WARNING label.

4. Adjust the temperature set point of the heater to the desired level. The factory default setting is 120ºF. If changes are necessary, follow "Basic Control Functions" in this manual.
5. If the water heater fails to start, refer to the Troubleshooting section in the back of this manual.

## B. Test Mode

Test Mode is enabled by pressing − or + together for 5 seconds. In this mode the water heater operates without modulation, and the combustion system initially runs at the maximum fan speed. The SERVICE symbol is displayed on the LCD when Test Mode is active.

Test Mode can be used to incrementally increase and decrease fan speed to test the combustion system. See the tables below for Combustion Settings and Fan Speeds.

1. Use the − or + buttons to decrease or increase the fan speed in increments of 50 rpm.
2. Press to advance directly to the maximum fan speed.
3. Press to go directly to the minimum fan speed.
4. Range between minimum and maximum fan speed is taken as an absolute power value (0 - 100%).
5. During Test Mode, the LCD flame symbols are enabled as follows:

Flame ON and power < 30% - - 1/3 flame symbol

Flame ON and power > 30% and <75% - - 2/3 flame symbol

Flame ON and power > 75% - - full flame symbol

6. Burner ON and OFF conditions are:
Burner ON: UPPER temperature < 185ºC
Burner OFF: UPPER temperature ≥ 194ºC
7. Test Mode can be enabled for a maximum of 15 minutes.
8. Test Mode can be disabled by pressing reset.

**WARNING**

It is very important that the combustion system be set within the recommended CO measurements listed below. Visually looking at the burner does not determine combustion quality. Failure to measure combustion with a calibrated Combustion Analyzer and set the throttle within the recommended CO measurements could result in property damage, severe personal injury, or death.

| Combustion Settings on All Models | | | | | | |
|---|---|---|---|---|---|---|
| Fan Speed | Natural Gas (NG) | | | Propane (LP) | | |
| | Low | Ignition | High | Low | Ignition | High |
| Carbon Monoxide (CO) PPM | 1-10 | 2-15 | 2-20 | 1-10 | 2-15 | 2-20 |
| Carbon Dioxide ($CO_2$) % | 8-10 | | | 8 1/2- 10 1/2 | | 9-11 |

**Table 18 - Combustion Settings - All Models**

| Fan Speeds | | | |
|---|---|---|---|
| Fuel | Ignition | Min | Max |
| Natural Gas | 5000 | 2150 | 6300 |
| Propane | 3800 | 2100 | |

**Table 19 - Fan Speeds**

## C. Maintenance

The control system requires no periodic maintenance under normal conditions. However, in unusually dirty or dusty conditions, periodic vacuuming of the cover to maintain visibility of the display and indicators is recommended. In dirty environments, such as construction sites, care must be taken to keep the water heater burner cover in place and drywall or saw dust away from water heater.

| Resistance Table for Supply Temperature Sensor | |
|---|---|
| High / Low Temp Sensor Temp. (ºF) | Resistance (Ohms) |
| 32 | 32550 |
| 41 | 25340 |
| 50 | 19870 |
| 59 | 15700 |
| 68 | 12490 |
| 77 | 10000 |
| 86 | 8059 |
| 95 | 6535 |
| 104 | 5330 |
| 113 | 4372 |
| 122 | 3605 |
| 131 | 2989 |
| 140 | 2490 |
| 149 | 2084 |
| 158 | 1753 |
| 167 | 1481 |
| 176 | 1256 |
| 185 | 1070 |
| 194 | 915 |
| 202 | 786 |
| 212 | 667 |

**Table 17 - Supply Temperature Resistance Sensor**

**CAUTION**

In unusually dirty or dusty conditions care must be taken to keep water heater burner door in place. Failure to do so VOIDS warranty.

**WARNING**

**Breathing Hazard - Carbon Monoxide Gas**

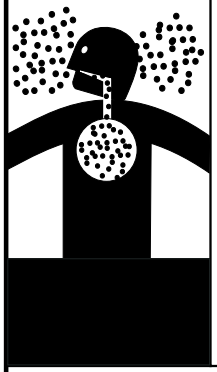

- Do not operate heater if flood damaged.
- Install vent system in accordance with local codes and manufacturers installation instructions.
- Do not obstruct heater air intake or exhaust. Support all vent piping per manufacturers installation instructions.
- Do not place chemical vapor emitting products near unit.
- According to NFPA 720, carbon monoxide detectors should be installed outside each sleeping area.
- Never operate the heater unless it is vented to the outdoors.
- Analyze the entire vent system to make sure that condensate will not become trapped in a section of vent pipe and therefore reduce the open cross sectional area of the vent.

**Breathing carbon monoxide can cause brain damage or death. Always read and understand instruction manual.**

LP-304

**WARNING**

Allowing the heater to operate with a dirty combustion chamber will hurt operation. Failure to clean the heat exchanger as needed by the installation location could result in heater failure, property damage, personal injury, or death. Such product failures ARE NOT covered under warranty.

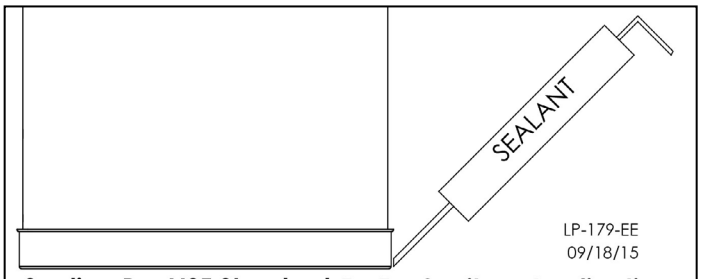


**Sealing Per NSF Standard 5 - For Sanitary Applications**
Apply a 3/8" bead of RTV Silicone completely around the tank to seal the base to the floor and prevent seepage underneath.

**Figure 25 - Sealing the Water Heater for Sanitary Applications**

## Part 11 - Shutdown

### A. Shutdown Procedure

If the burner is not operating, lower the set point value to 70ºF and wait for the burner to shut off. Continue to wait for the combustion blower to stop, so all latent combustion gases are purged from the system. This should take a maximum of 5 minutes. After combustion gases are purged turn off electrical power to the water heater.

### B. Vacation Procedure

If there is danger of freezing, change the set point to 70ºF. DO NOT turn off electrical power. If there is no danger of freezing, follow "Shutdown Procedure".

### C. Failure to Operate

Should the burner fail to light, the control will perform two more ignition trials prior to entering a lockout state. Note that each subsequent ignition trial will not occur immediately. After a failed ignition trial, the blower must run for approximately 10 seconds to purge the system. Therefore, a time period of approximately 40 to 90 seconds will expire between each ignition trial.

If the burner lights during any one of these three ignition trials, normal operation will resume. If the burner lights, but goes off in about 4 seconds, check the polarity of the wiring. See electrical connection section of this manual.

If the burner does not light after the third ignition trial, the control will enter a lockout state. This lockout state indicates that a problem exists with the water heater, the controls, or the gas supply. Under such circumstances, a qualified service technician should be contacted immediately to properly service the water heater and correct the problem.

If a technician is not available, pressing the reset button will remove the lockout state so additional trials for ignition can be performed.

### D. Important Notice

**NOTICE**

It is extremely important that whenever work is performed on the plumbing system that either:

- The water heater is powered off, or,
- The water heater is valved off and isolated from the plumbing system.

Failure to take these measures could result in a dry-firing condition.

**WARNING**

The water heater must be full of water and the system fully purged BEFORE powering the water heater. Performing any work in the plumbing system without either powering off the water heater or isolating the water heater through the use of shut-off valves could result in a condition referred to as "dry-firing". Dry-firing the water heater will damage the heat exchanger, and could result in property damage, serious personal injury, or death. Such damages ARE NOT covered by water heater warranty.

## Part 12 - Troubleshooting

### A. Error Code

An error code may occur during installation of the heater. This condition may lead to a lock out condition of the controller, which will need to be manually reset by pressing the reset button.

### B. Heater Error

1. When an error condition occurs the controller will display an error code on the display module.
2. These error codes and several suggested corrective actions are included in Table 20.
3. In the case of E07 and E13 error codes, if uncorrected, the water heater will go into a fault condition as described in section C. Lockout.

### C. Lockout

1. When an fault condition occurs, the controller will display a fault code (example: F00 on the display module).
2. Note the fault code and refer to Table 21 for an explanation of the fault code along with several suggestions for corrective actions.
3. Press the reset button to clear the fault and resume operation. Be sure to observe the operation of the unit to prevent a recurrence of the fault. NOTE: You are allowed up to 5 "resets" to clear fault or error codes. After that, the controller will enter an E13 lockout state.

**WARNING**

When servicing or replacing any components of this water heater be certain that:

- The gas is off.
- All electrical power is disconnected.

In addition, when servicing or replacing components of this water heater in direct contact with heater water:

- There is no pressure in the heater. Pull the release on the relief valve to relieve pressure in the heater.
- Heater water is not hot.

Failure to follow these precautions could result in property damage, serious personal injury, or death. Such damages ARE NOT covered by water heater warranty.

**DO NOT USE THIS APPLIANCE IF ANY PART HAS BEEN SUBMERGED IN WATER.** Immediately call a qualified service technician. The appliance MUST BE replaced if it has been submerged. Attempting to operate an appliance that has been submerged could create numerous harmful conditions, such as a potential gas leakage causing a fire and/or explosion, or the release of mold, bacteria, or other harmful particulates into the air. Operating a previously submerged appliance could result in property damage, severe personal injury, or death.

**NOTE:** Appliance damage due to flood or submersion is considered an Act of God, and IS NOT covered under product warranty.

# CAUTION

The water heater has wire function labels on all internal wiring. Observe the position of each wire before removing it. Wiring errors may cause improper and dangerous operation. Verify proper operation after servicing.

| Control Board Blocking Errors | | | |
|---|---|---|---|
| **Code** | **Short Description** | **Long Description** | **Corrective Action** |
| **E07** | Flue Temperature Too High | The flue temperature has met / surpassed the maximum limit. | 1. Is the tank full of water? This error code will appear if the tank is dry-fired.<br>2. Measure actual Flue temperature.<br>3. Use an ohmmeter to check resistance on flue temperature sensor.<br>4. Replace sensor if it does not pass the resistance test.<br>5. If Flue temperature does not return to normal within 15 minutes, this error shall become an F07 fault code.<br>6. Error will clear automatically if Flue temperature returns to normal within 15 minutes. |
| **E13** | Remote Reset Volatile Lockout | The FIVE RESETS counter has been reached. | Service and repair unit per displayed error code. Turn the main power supply to the unit off and back on to clear out the error code. |
| **E34** | Low Main Power Supply | The main power supply is too low (below 75 VAC) to properly power the water heater. | 1. When main power is brought back to a normal state (over 75 VAC), water heater will resume normal operation.<br>2. Measure AC mains. |
| **E39** | Outdoor Temperature Sensor Error (When Enabled) | The outdoor temperature sensor is out of normal operating range, meaning the sensor is either open or shorted for more than 3 seconds. The E39 code will flash and alternate with the DHW set point, ensuring the system continues to supply hot water. | 1. If the Outdoor Temperature Sensor returns to normal operating range, this error code will clear on its own. Normal operating range of the sensor is -40$^{o}$F – 122$^{o}$F.<br>2. Check the Outdoor Temperature Sensor. Ensure it is properly wired and connected, and that there are no breaks, cuts, or other visible issues with the sensor wire.<br>3. Use an ohmmeter to check resistance on the outdoor temperature sensor.<br>4. Replace Outdoor Temperature Sensor if it fails the resistance test. |
| **E53** | Flue Temperature Sensor Error | The flue temperature sensor is out of normal operating range, meaning the sensor is either open or shorted. | 1. Check the Flue Temperature Sensor. Ensure it is properly wired to the control, and that there are no breaks, cuts, or other visible issues with the sensor wire.<br>2. Use an ohmmeter to check resistance on flue temperature sensor.<br>3. Replace Flue Temperature Sensor if it does not pass the resistance test. |
| **E64** | Blocked Flue | The control detects a blocked flue condition. | 1. Check the Flue termination. Ensure there are no blockages or obstructions in the Flue.<br>2. Check APS switch. Ensure it is properly wired to the control, and that there are no breaks, cuts, or other visible issues with the wiring.<br>3. Replace APS switch. |

**Table 20 - Blocking Error Codes**

| Control Board Blocking Errors | | | |
|---|---|---|---|
| **Code** | **Short Description** | **Long Description** | **Corrective Action** |
| **F01** | Ignition Lockout Indication | The control senses no flame after three ignition attempts. | 1. Is the gas turned on to the water heater?<br>2. Manually reset the water heater.<br>3. Observe water heater operation. If fault code occurs again:<br>4. Check for stable gas pressure.<br>5. Check ignitor cable connections.<br>6. Check ignitor cable ground.<br>7. Replace cable.<br>8. Check spark gap between spark electrode and burner.<br>9. Replace ignitor. |
| **F02** | False Flame Indication | The control senses a flame signal when there is no heat demand. | 1. Visually check for flame through the sight glass.<br>2. Manually reset the water heater.<br>3. Observe water heater operation. If fault code occurs again:<br>4. Check ignitor cable connections.<br>5. Check ignitor cable ground.<br>6. Replace cable.<br>7. Replace ignitor. |

| Code | Short Description | Long Description | Corrective Action |
|---|---|---|---|
| **F03** | High Limit Temperature Protection | The control shuts down the water heater after it has met / surpassed the high temperature limit. | 1. Manually reset the water heater.<br>2. Observe water heater operation. If fault code occurs again:<br>3. Check the Dual Temperature Sensor. Ensure it is properly wired to the control, and that there are no breaks, cuts, or other visible issues with the sensor wire.<br>4. Use an ohmmeter to check resistance on first Sensor A, then Sensor B of the Dual Temperature Sensor.<br>5. Replace Dual Temperature Sensor if either Sensor A or Sensor B fails the resistance test. See Figure 26.<br> 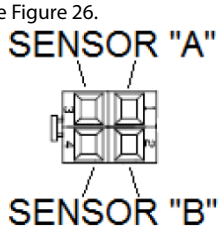 <br><br>**Figure 26 - Sensor Detail** |
| **F05** | Incorrect Fan Speed | The control detects incorrect fan speed. | 1. Manually reset the water heater.<br>2. Observe water heater operation. If fault code occurs again:<br>3. Check condition of wiring.<br>4. Check Fan PWM connections at control board and fan.<br>5. Replace fan. |
| **F07** | Vent Temperature Too High | The vent temperature has met / surpassed the maximum limit for more than 15 minutes. | 1. Manually reset the water heater.<br>2. Observe water heater operation. If fault code occurs again:<br>3. Replace sensor.<br>4. Measure actual vent temperature. |
| **F08** | Flame Circuit Failure | The control detects an incorrect flame level. | 1. Manually reset the water heater.<br>2. Observe water heater operation. If fault code occurs again:<br>3. Check ignitor cable connections.<br>4. Check ignitor cable ground.<br>5. Replace cable.<br>6. Check spark gap between spark electrode and burner.<br>7. Replace ignitor. |
| **F09** | Valve Feedback Error | The gas valve does not respond to controller demands. | 1. Manually reset the water heater.<br>2. Observe water heater operation. If fault code occurs again, reset the water heater and:<br>3. When water heater attempts to fire, check voltage at the gas valve connector. If there is voltage, but no gas pressure on the outlet side of the valve, the valve is stuck closed. Replace the gas valve.<br>4. If there is no voltage at the ignition phase, replace the control board. |
| **F12** | EEPROM Integrity Lockout | The EEPROM check fails. EEPROM data is corrupted. | 1. Manually reset the water heater.<br>2. Observe water heater operation. If fault code occurs again:<br>3. Replace the controller. |
| **F14** | Tank Sensor Data Not Consistent | The data received from the tank sensors exceeds the difference allowed by the control. | 1. Manually reset the water heater.<br>2. Observe water heater operation. If fault code occurs again:<br>3. Check the Dual Temperature Sensor. Ensure it is properly wired to the control, and that there are no breaks, cuts, or other visible issues with the sensor wire.<br>4. Use an ohmmeter to check resistance on first Sensor A, then Sensor B of the Dual Temperature Sensor.<br>5. Replace Dual Temperature Sensor if either Sensor A or Sensor B fails the resistance test. See Figure 26. |
| **F21** | ADC Failure | The ADC test has detected a major fault in the electronic components. | 1. Manually reset the water heater.<br>2. Observe water heater operation. If fault code occurs again:<br>3. If fault code occurs again, replace the controller. |
| **F31** | Dual Temperature Sensor B Error | Dual Temperature Sensor B is out of normal operating range, meaning the sensor is either open or shorted. | 1. Manually reset the water heater.<br>2. Observe water heater operation. If fault code occurs again:<br>3. Check the Dual Temperature Sensor. Ensure it is properly wired to the control, and that there are no breaks, cuts, or other visible issues with the sensor wire.<br>4. Use an ohmmeter to check resistance on Sensor B of the Dual Temperature Sensor.<br>5. Replace Dual Temperature Sensor if Sensor B fails the resistance test. See Figure 26. |

| Code | Short Description | Long Description | Corrective Action |
|---|---|---|---|
| **F35** | Dual Temperature Sensor A Error | Dual Temperature Sensor A is out of normal operating range, meaning the sensor is either open or shorted. | 1. Manually reset the water heater.<br>2. Observe water heater operation. If fault code occurs again:<br>3. Check the Dual Temperature Sensor. Ensure it is properly wired to the control, and that there are no breaks, cuts, or other visible issues with the sensor wire.<br>4. Use an ohmmeter to check resistance on Sensor A of the Dual Temperature Sensor.<br>5. Replace Dual Temperature Sensor if Sensor A fails the resistance test. See Figure 26. |
| **F82** | Unstable Flame Lockout | The control detects an unstable flame. | 1. Manually reset the water heater.<br>2. Observe water heater operation.<br>3. If fault code occurs again check for stable gas pressure.<br>4. Check ignitor cable connections.<br>5. Check ignitor cable ground.<br>6. Replace cable.<br>7. Replace ignitor. |

**Table 21 - Lockout Fault Codes - NOTE: If you replace a part to remedy a fault, it is recommended that you cycle the water heater at least three or four times to assure the fault has been resolved.**

## Part 13 - Installation Checklist

| Before Installing | Yes | No |
|---|---|---|
| Is there enough space to ensure proper installation? | | |
| Does installation location allow for proper service clearances? | | |
| Are water and gas lines properly sized and set at proper pressures for the installation? | | |
| Is water heater location as near the exhaust vent / intake pipe terminations as possible? | | |
| Have combustible materials been cleared from the installation location? | | |
| Is there a drain close to the water heater? | | |
| **Water Piping** | **Yes** | **No** |
| Does water heater loop piping meet the minimum sizing requirements listed?<br>**NOTE:** Smaller piping will cause performance problems. | | |
| Has water chemistry been checked? | | |
| Does water chemistry meet requirements? | | |
| If water chemistry does not meet requirements, have treatment measures been put in place? | | |
| Has the system been cleaned and flushed? | | |
| **Install Exhaust Vent and Intake Piping** | **Yes** | **No** |
| Has the water heater been vented with the approved materials listed in this manual or to meet local codes? | | |
| Is air supply sufficient for proper water heater operation? | | |
| Is total vent piping length within the maximum vent length restriction listed in this manual? | | |
| Have venting lengths been minimized? | | |
| Are terminations properly spaced from windows, doors, and other intake vents? | | |
| Have all vent terminations been installed at least one foot above exterior grade and one foot above normal snow accumulation level? | | |
| Is vent piping properly supported? | | |
| Has vent piping been checked for leaks? | | |
| Has the exhaust vent line been pitched back to the water heater at a rate of 1/4" per foot? | | |
| Have the exhaust vent and intake pipes been properly installed to the water heater? | | |
| **Install Condensate Piping / Tubing and Components** | **Yes** | **No** |
| Have all condensate components included with the water heater been installed? | | |
| Is the condensate line piped with approved materials listed in this manual? | | |
| Has the condensate line been routed to a laundry tub or other drain? | | |
| **Install Gas Piping** | **Yes** | **No** |
| Is the gas supply line a minimum of 3/4" in diameter? | | |
| Is the gas supply line length and diameter adequate to deliver the required BTUs? | | |
| Has gas supply line pressure been measured? | | |
| Does the gas type match the type indicated on the water heater rating plate? | | |
| Has a union and shut-off valve been installed? | | |
| **Relief Valve** | **Yes** | **No** |
| Is the Temperature and Pressure Relief Valve properly installed and discharge line run to open drain? | | |
| Is the discharge line protected from freezing? | | |
| **Wiring** | **Yes** | **No** |
| Has the power and control been wired per water heater wiring diagram, this manual? | | |
| Is the electrical connection polarity within water heater requirements? | | |
| Does the power supply voltage agree with the water heater rating plate? | | |
| Is the branch circuit wire and fusing or circuit breaker of proper size? | | |
| Are electrical connections tight and properly grounded? | | |

| Start-Up, Adjust, and Test | Yes | No |
|---|---|---|
| Has the water heater been started? | | |
| If necessary, has the water heater gas valve been adjusted? | | |
| Has the installation been customized per installation location requirements? | | |
| Have all customized system parameters been tested? | | |
| Has proper water heater operation been confirmed? | | |
| **Final Installation Approvals** | | |
| **Signed by Technician** | **Date** | |
| | | |

**Table 22 - Installation Checklist**

## Part 14 - Maintenance

**CAUTION**

In unusually dirty or dusty conditions, care must be taken to keep water heater cabinet door in place at all times. Failure to do so VOIDS the warranty.

**WARNING**

Allowing the water heater to operate with a dirty combustion chamber will hurt operation. Failure to clean the heat exchanger as needed by the installation location could result in water heater failure, property damage, personal injury, or death. Such product failures ARE NOT covered under warranty.

Hydrogen gas can build up in a hot water system served by this water heater that has not been used for a long period of time (generally two weeks or more). When opening a hot water faucet in a system that has been out of use for a time, keep all ignition sources (electrical appliances, open flame, etc.) away from the faucet. If hydrogen is present, there will be a sound of air escaping as water begins to flow. Allow the water to run for a few minutes to dissipate built up hydrogen from the system. Failure to follow these instructions can result in property damage, personal injury, or death.

The water heater requires minimal periodic maintenance under normal conditions. However, in unusually dirty or dusty conditions, periodic vacuuming of the cover to maintain visibility of the display and indicators is recommended.

Periodic maintenance should be performed once a year by a qualified service technician to assure that all the equipment is operating safely and efficiently. The owner should make necessary arrangements with a qualified heating contractor for periodic maintenance of the heater. The installer must also inform the owner that the lack of proper care and maintenance of the heater may result in a hazardous condition.

**NOTICE**

It is extremely important that whenever work is performed on the plumbing system that either:

- The water heater is powered off, or,
- The water heater is valved off and isolated from the plumbing system.

Failure to take these measures could result in a dry-firing condition.

**WARNING**

The water heater must be full of water and the system fully purged BEFORE powering the water heater. Performing any work in the plumbing system without either powering off the water heater or isolating the water heater through the use of shut-off valves could result in a condition referred to as “dry-firing”. Dry-firing the water heater will damage the heat exchanger, and could result in property damage, serious personal injury, or death. Such damages ARE NOT covered by water heater warranty.

| Inspection Activities | | Date Last Completed | | | |
|---|---|---|---|---|---|
| **Piping** | | **1st Year** | **2nd Year** | **3rd Year** | **4th Year*** |
| Near heater piping | Check heater and system piping for any sign of leakage; make sure pipes are properly supported. | | | | |
| Vent | Check condition of all vent pipes and joints. Ensure the vent piping terminations are free of obstructions and blockages. | | | | |
| Gas | Check gas piping. Test for leaks and signs of aging. Make sure all pipes are properly supported. | | | | |
| **System** | | **1st Year** | **2nd Year** | **3rd Year** | **4th Year*** |
| Visual | Do a full visual inspection of all system components. | | | | |
| Functional | Test all functions of the system (Heat, Safeties). | | | | |
| Temperatures | Verify safe settings on heater or anti-scald valve. | | | | |
| | Verify programmed temperature settings. | | | | |
| **Electrical** | | | | | |
| Connections | Check wire connections. Make sure connections are tight. | | | | |
| Smoke and CO Detector | Verify devices are installed and working properly. Change batteries if necessary. | | | | |
| Circuit Breakers | Check to see that the circuit breaker is clearly labeled. Exercise circuit breaker. | | | | |
| **Chamber / Burner** | | **1st Year** | **2nd Year** | **3rd Year** | **4th Year*** |
| Combustion Chamber | Check burner tube and combustion chamber coils. Clean according to maintenance section of manual. Vacuum combustion chamber. Replace any gaskets that show signs of damage. | | | | |
| Spark Electrode | Clean. Set gap at 1/4" Clean probe with plumbers cloth to remove oxides. | | | | |
| Combination Ignitor and Flame Probe | Check ionization in uA (i04 in the Inquiry Mode menu). Record high fire and low fire. Clean probe with plumbers cloth to remove oxides. | | | | |
| **Condensate** | | **1st Year** | **2nd Year** | **3rd Year** | **4th Year*** |
| Condensate Pipe | Disconnect condensate pipe. Clean out dirt. Fill with water to level of outlet and reinstall. (NOTE: Verify the flow of condensate, making sure that the hose is properly connected during final inspection.) | | | | |
| **Gas** | | **1st Year** | **2nd Year** | **3rd Year** | **4th Year*** |
| Pressure | Measure incoming gas pressure (3.5" to 10" WC for Natural Gas, 8" to 14" WC for Propane). | | | | |
| Pressure Drop | Measure drop in pressure on light off (no more than 1" WC). | | | | |
| Check Gas Pipe for Leaks | Check piping for leaks. Verify that all are properly supported. | | | | |
| **Combustion** | | **1st Year** | **2nd Year** | **3rd Year** | **4th Year*** |
| CO / CO2 Levels | Check CO and CO2 levels in exhaust with a calibrated combustion analyzer. See manual for ranges. Record at high and low fire. | | | | |
| **Safeties** | | **1st Year** | **2nd Year** | **3rd Year** | **4th Year*** |
| ECO (Energy Cut Out) | Check continuity on flue and water ECO. Replace if corroded. | | | | |
| Sensors | Check wiring. Verify through ohms reading. | | | | |
| **Final Inspection** | | **1st Year** | **2nd Year** | **3rd Year** | **4th Year*** |
| Check List | Verify that you have completed entire check list. WARNING: FAILURE TO DO SO COULD RESULT IN SERIOUS INJURY OR DEATH. | | | | |
| Homeowner | Review what you have done with the homeowner. | | | | |

**Table 23 - *Continue annual maintenance beyond the 4th year as required.**

## Part 15 - Replacement Parts

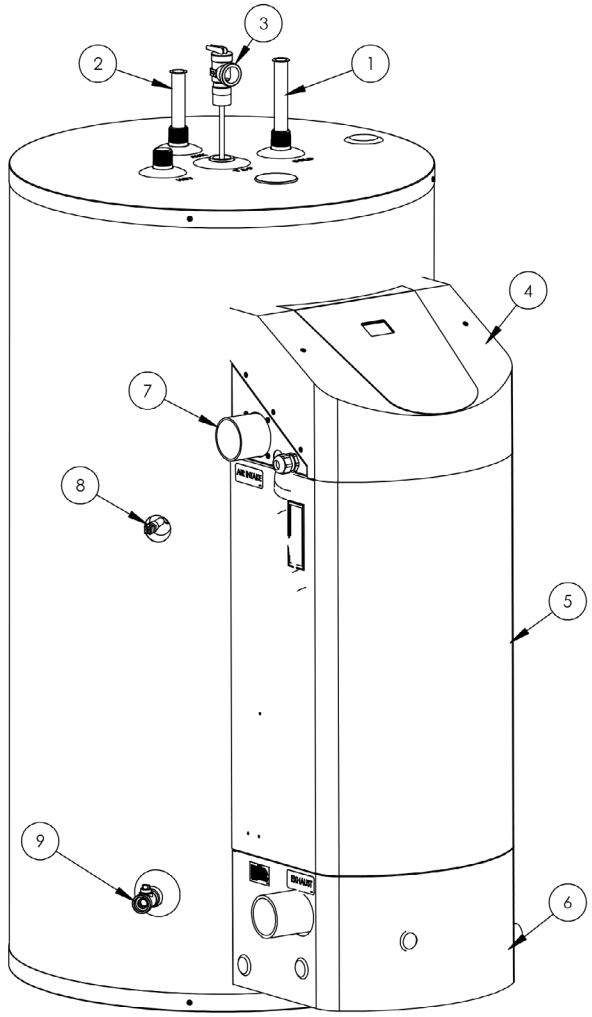


| ITEM # | DESCRIPTION | REPLACEMENT PART # |
|---|---|---|
| 1 | COLD INLET DIP TUBE - 50 MODEL | 6070P-038 |
| | COLD INLET DIP TUBE - 60 MODEL | 7700P-061 |
| | COLD INLET DIP TUBE - 80 MODEL | 7700P-062 |
| 2 | AUXILIARY DIP TUBE - 50 MODEL | 7700P-160 |
| | AUXILIARY DIP TUBE - 60 MODEL | 6070P-044 |
| | AUXILIARY DIP TUBE - 80 MODEL | 6070P-038 |
| 3 | TEMP/PRESSURE RELIEF VALVE | TP1700 |
| 4 | CABINET UPPER PANEL | 7700P-082 |
| 5 | CABINET ACCESS DOOR | 7700P-042 |
| 6 | CABINET LOWER PANEL | 7700P-043 |
| 7 | AIR INLET TUBE w/FLAPPER | 7700P-046 |
| 8 | COMBINATION TEMPERATURE SENSOR | 7700P-073 |
| 9 | BRASS DRAIN VALVE | 7100P-278 |

**Figure 27 - Replacement Parts**

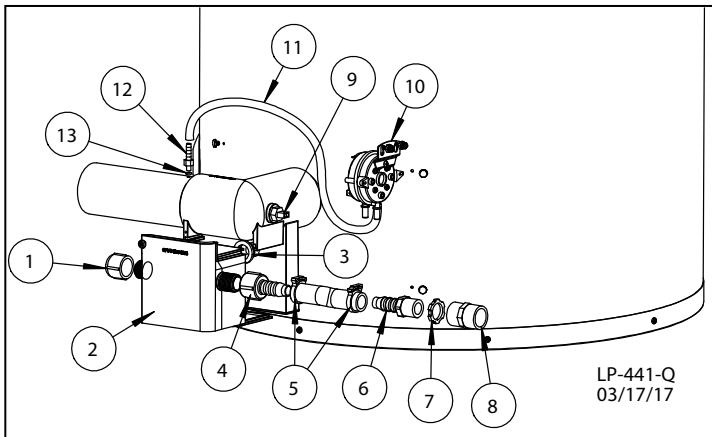


| # | Description | Part Number |
|---|---|---|
| 1 | CAP - 1/2" NPT | 7700P-078 |
| 2 | CONDENSATE TRAP | 7700P-026 |
| 3 | WASHER - CONDENSATE | 7700P-031 |
| 4 | ADAPTER - 1/2" NPT FEM X BARB | 7700P-076 |
| 5 | CONDENSATE HOSE (w/CLAMPS) | 7700P-068 |
| 6 | FITTING - 1/2" NPT MALE X BARB | 7100P-044 |
| 7 | LOCKNUT - 1/2" | 7700P-002 |
| 8 | ADAPTER - 1/2 X 1/2 | 7700P-077 |
| 9 | FLUE TEMPERATURE SENSOR | 7450P-026 |
| 10 | PRESSURE SWITCH | 7700P-038 |
| 11 | HOSE - PRESSURE SWITCH/GAS VALVE | 7000P-805 |
| 12 | STAINLESS STEEL BARB | 7250P-154 |
| 13 | O-RING | 7250P-152 |

**Figure 28 - Condensate System Replacement Parts - Water Heaters Manufactured Prior to 9/27/17 ONLY**

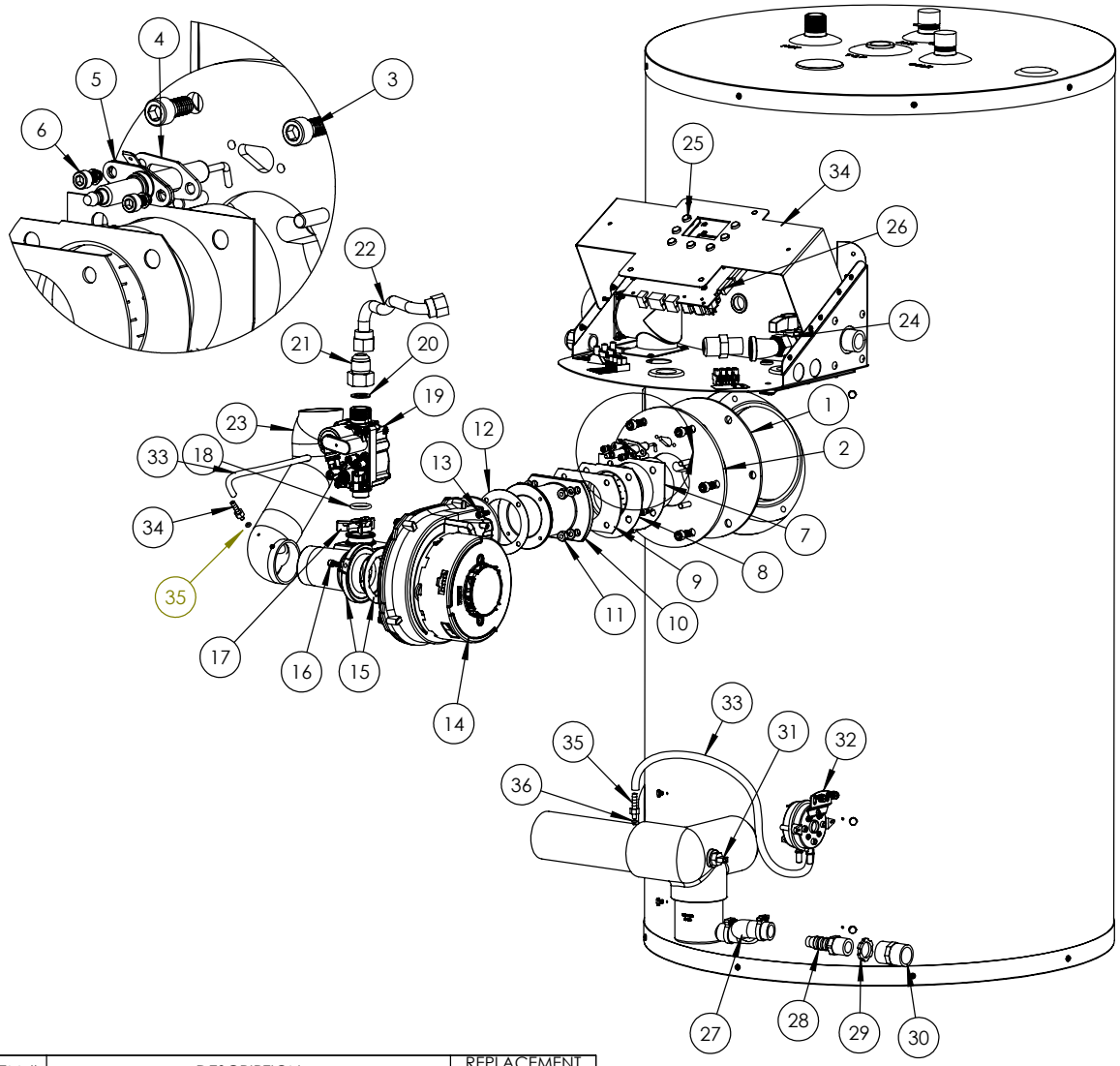


| ITEM # | DESCRIPTION | REPLACEMENT PART # |
|---|---|---|
| 1 | GASKET - BURNER MOUNTING PLATE | 7700P-017 |
| 2 | BURNER MOUNTING PLATE | 7700P-016 |
| 3 | SCREWS - 5/16-18 - BURNER MOUNTING PLATE | 7700P-101 |
| 4 | GASKET - IGNITOR | 7700P-071 |
| 5 | ELECTRODE - SPARK (w/GASKET) | 7100P-124 |
| 6 | SCREWS/WASHERS 10-32 - ELECTRODE (2) | 7100P-097 |
| 7 | GASKET - BURNER FLANGE | 7100P-152 |
| 8 | BURNER (w/GASKET) | 7700P-104 |
| 9 | GASKET - BLOWER OUTLET | 7000P-361 |
| | GASKET - BLOWER OUTLET (LP ONLY) | 7700P-107 |
| 10 | AIR INLET CHANNEL | 7700P-003 |
| 11 | NUTS/WASHER - 1/4-20 | 7100P-268 |
| 12 | GASKET - AIR INLET CHANNEL/BLOWER | 7500P-075 |
| | GASKET- AIR INLET CHANNEL/BLOWER (LP ONLY) | 7700P-106 |
| 13 | SCREW - 10-32 - COMBUSTION BLOWER | 7700P-101 |
| 14 | COMBUSTION BLOWER | 7700P-102 |
| 15 | VENTURI | 7700P-032 |
| 16 | SCREW - M5 X 12MM - VENTURI | 7250P-478 |
| 17 | CLIP - VENTURI | 7700P-034 |
| 18 | O-RING - VENTURI | 7700P-035 |
| 19 | GAS VALVE | 7700P-036 |
| 20 | WASHER - FEMALE ADAPTER | 7450P-115 |
| 21 | FITTING - FLARE X BSPP ADAPTER | 7700P-072 |

| | | |
|---|---|---|
| 22 | GAS LINE - FLEXIBLE 1/2" | 7100P-140 |
| 23 | AIR INLET | 7500P-189 |
| 24 | GAS SHUT-OFF VALVE | 7250P-140 |
| 25 | KEYPAD | 7700P-039 |
| 26 | CONTROL BOARD - NATURAL GAS | 7700P-3100 |
| | CONTROL BOARD - LP GAS | 7700P-3101 |
| 27 | CONDENSATE HOSE (w/CLAMPS) | 7700P-211 |
| 28 | FITTING - 1/2" NPT MALE X BARB | 7100P-044 |
| 29 | LOCKNUT - 1/2" | 7700P-002 |
| 30 | ADAPTER - 1/2 X 1/2 | 7700P-077 |
| 31 | FLUE TEMPERATURE SENSOR | 7450P-026 |
| 32 | PRESSURE SWITCH | 7700P-038 |
| 33 | HOSE - PRESSURE SWITCH/GAS VALVE | 7000P-805 |
| 34 | CONTROL BOARD MOUNTING PANEL | 7700P-044 |
| 35 | STAINLESS STEEL BARB | 7250P-154 |
| 36 | O-RING | 7250P-152 |
| | LOW VOLTAGE WIRE HARNESS (NOT SHOWN) | 7700P-085 |
| | 120V WIRE HARNESS (NOT SHOWN) | 7700P-086 |
| | POWER PLUG (NOT SHOWN) | 7700P-110 |
| | SPARK CABLE (NOT SHOWN) | 7700P-019 |

**Figure 29 - Replacement Parts**

**Phoenix® Light Duty**
**Gas Water Heater and Solar Gas Water Heater**
**Limited Warranty**
**For Residential and Commercial Use**

HTP warrants this water heater and its components to be free from defects in material and workmanship according to the following terms, conditions, and time periods. UNLESS OTHERWISE NOTED THESE WARRANTIES COMMENCE ON THE DATE OF INSTALLATION. This limited warranty is only available to the **original consumer purchaser** (herinafter "Owner") of this water heater, and is non-transferable.

| **Standard Residential Use Warranty (Seven (7) years – Tank, One (1) year – Parts)** |
|---|
| Standard Residential Use shall mean water heaters not registered online with HTP used in a single family dwelling, or usage in a multiple family dwelling, provided that the water heater services only one (1) dwelling in which the Owner resides on a permanent basis and operating temperatures do not exceed 140°F. |
| **Extended Residential Use Warranty (Ten (10) years – Tank, One (1) year – Parts)** |
| Extended Residential Use coverage shall apply to residential use water heaters registered online with HTP at http://www.htproducts.com/warranty within 90 days of the installation date. This Extended Residential Use Warranty is provided at no additional charge. See information provided on the following page of this document for registration details. |
| **Standard Commercial Use Warranty (Three (3) years – Tank, One (1) year – Parts)** |
| Standard Commercial Use shall mean any usage not falling within the definition of a "standard residential use" setting and not upgraded as defined below. |
| **Upgraded Commercial Use Warranty (Five (5) years – Tank, One (1) year – Parts)** |
| Upgraded Commercial Use coverage is available at an additional charge and shall apply to commercial use water heaters registered with HTP online at http://www.htproducts.com/warranty within 90 days of the installation date. See information provided on the following page of this document for registration details. |

## COVERAGE

A. During the first year after the original date of installation, HTP warrants that it will repair or replace, at its option, any defective or malfunctioning component of the water heater with a component of equivalent size and current model. Replacement components will be warranted for ninety (90) days.

B. Should a defect or malfunction result in a leakage of water from the water heater within the above-stated warranty periods due to defective material or workmanship, malfunction, or failure to comply with the above warranty, with such defect or malfunction having been verified by an authorized HTP representative, HTP will replace the defective or malfunctioning water heater with a replacement of the nearest comparable model available at the time of replacement. The replacement water heater will be warranted for the unexpired portion of the applicable warranty period of the original water heater.

C. In the event of a leakage of water of a replacement water heater due to defective material or workmanship, malfunction, or failure to comply with the above warranty, HTP reserves the right to refund to the Owner the published wholesale price available at the date of manufacture of the original water heater.

D. If government regulations, industry certification, or similar standards require the replacement water heater or component(s) to have features not found in the defective water heater or component(s), the Owner will be charged the difference in price represented by those required features. If the Owner pays the price difference for those required features and/or to upgrade the size and/or other features available on a new replacement water heater or component(s), the Owner will also receive a complete new limited warranty for that replacement water heater or component(s).

E. If at the time of a request for service the Owner cannot provide a copy of the original sales receipt or the warranty registration, the warranty period for the water heater shall then be deemed to have commenced thirty (30) days after the date of manufacture of the water heater and NOT the date of installation of the water heater.

F. This warranty extends only to water heaters utilized in water heating applications that have been properly installed by qualified professionals based upon the manufacturer's installation instructions.

G. It is expressly agreed between HTP and the Owner that repair, replacement, or refund are the exclusive remedies of the Owner.

## OWNER RESPONSIBILITIES

The Owner or Qualified Installer / Service Technician must:

1. Have a relief valve bearing the listing marks of the American Society of Mechanical Engineers (ASME) installed with the water heater assembly in accordance with federal, state, and local codes.
2. Have a vacuum relief valve certified to ANSI Z21.22 - Relief Valves for Hot Water Supply Systems installed with the water heater assembly in accordance with federal, state, and local codes and in installations prone to vacuum related damages.
3. Maintain the water heater in accordance with the maintenance procedure listed in the manufacturer's provided instructions. Preventive maintenance can help avoid any unnecessary breakdown of the water heater and keep it running at optimum efficiency.
4. Maintain all related system components in good operating condition.
5. Use the water heater in an open system, or in a closed system with a properly sized and installed thermal expansion tank.
6. Use the water heater at water pressures not exceeding the working pressure shown on the rating plate.
7. Keep the water heater free of damaging scale deposits.
8. Make provisions so if the water heater or any component or connection thereto should leak, the resulting flow of water will not cause damage to the area in which it is installed.

## WARRANTY EXCLUSIONS

This limited warranty will not cover:

1. Any water heater purchased from an unauthorized dealer.
2. Any water heater not installed by a qualified installer / service technician, or installations that do not conform to ANSI, CSA, and/or UL standards, as well as any applicable national or local building codes.
3. Service trips to teach the Owner how to install, use, maintain, or to bring the water heater installation into compliance with local building codes and regulations.
4. The workmanship of any installer. The manufacturer disclaims and does not assume any liability of any nature caused by improper installation, repair, or maintenance.
5. Electricity or fuel costs, or increased or unrealized savings for same, for any reason whatsoever.
6. Any water damage arising, directly or indirectly, from any defect in the water heater or component part(s) or from its use.
7. Any incidental, consequential, special, or contingent damages or expenses arising, directly or indirectly, from any defect in the water heater or the use of the water heater.
8. Failure to locate the water heater in an area where leakage of the tank or water line connections and the relief valve will not result in damage to the area adjacent to the water heater or lower floors of the structure, as well as failure to install the water heater in or with a properly sized drain pan routed to an approved drainage location.
9. Any failed components of the system not manufactured by HTP as part of the water heater.
10. Water heaters repaired or altered without the prior written approval of HTP.
11. Damages, malfunctions, or failures resulting from failure to install the water heater in accordance with applicable building codes/ordinances or good plumbing and electrical trade practices.
12. Damages, malfunctions, or failures resulting from improper installation, failure to operate the water heater at firing rates or pressures not exceeding those on the rating plate, or failure to operate and maintain the water heater in accordance with the manufacturer's provided instructions.
13. Failure to operate the water heater in a an open system, or in a closed system with a properly sized and installed thermal expansion tank.
14. Failure or performance problems caused by improper sizing of the water heater, expansion device, piping, or the gas supply line, the venting connection, combustion air openings, electric service voltage, wiring or fusing.
15. Damages, malfunctions, or failures caused by improper conversion from

natural gas to LP gas or LP gas to natural gas.
16. Damages, malfunctions, or failures caused by operating the water heater with modified, altered, or unapproved components, or any component / attachment not supplied by HTP.
17. Damages, malfunctions, or failures caused by abuse, accident, fire, flood, freeze, lightning, electrochemical reaction, acts of God and the like.
18. Failures (leaks) caused by operating the water heater in a corrosive or contaminated atmosphere.
19. Damages, malfunctions, or failures caused by operating an empty or partially empty water heater ("dry firing"), or failures caused by operating the water heater when it is not supplied with water, free to circulate at all times.
20. Any damage or failure of the water heater due to the accumulation of solid materials or lime deposits.
21. Any damage or failure resulting from improper water chemistry. WATER CHEMISTRY REQUIREMENTS (RESIDENTIAL USE) – Water pH between 6.5 and 8.5. Operating temperatures not exceeding 140ºF. Hardness less than 12 grains (200 mg/L). Chloride concentration less than 100 ppm (mg/L). TDS less than 500 ppm (mg/L). (COMMERCIAL USE) - Water pH between 6.5 and 8.5. Hardness less than 7 grains (120 mg/L). Chloride concentration less than 100 ppm (mg/L). TDS less than 500 ppm (mg/L).
22. Any damages, malfunctions, or failures resulting from the use of dielectric unions.
23. Water heaters replaced for cosmetic reasons.
24. Components of the water heater that are not defective, but must be replaced during the warranty period as a result of reasonable wear and tear.
25. Components of the water heater that are subject to warranties, if any, given by their manufacturers; HTP does not adopt these warranties.
26. Damages, malfunctions, or failures resulting from the use of any attachment(s) not supplied by HTP.
27. Water heaters installed outside the fifty states (and the District of Columbia) of the United States of America and Canada.
28. Water heaters moved from the original installation location.
29. Water heaters that have had their rating labels removed.

## ONLINE EXTENDED/UPGRADED LIMITED WARRANTY REGISTRATION

To register for the Extended/Upgraded Limited Warranty, complete the form located on the HTP website at http://www.htproducts.com/warranty within 90 days of installation. The form must be completed in full with owner name, email address, and phone number, the address where the unit is installed and installation date, and unit model and serial numbers. Proof of purchase is required, and may be an invoice for the product, or a bill from an installing contractor that clearly documents the installation of the unit. To be valid, proof of purchase must also include the unit serial number. Proof of purchase may be typed or hand written. Submit the proof of purchase to HTP via the directions provided on the website.

**NOTE:** An additional fee must be paid to purchase the Upgraded Commercial Warranty.

## PROCEDURES FOR WARRANTY SERVICE REQUESTS

Any claim for warranty assistance must be made immediately upon finding the issue. First, please consult the HTP Warranty Wizard (http://www.htproducts.com/Warranty-Wizard.html) to check warranty eligibility. You may also contact HTP Technical Support at 1-800-323-9651 for questions or assistance. Warranty coverage requires review and approval of the issue with HTP Technical Support or through the Warranty Wizard prior to a full unit replacement. Any claim for warranty reimbursement will be rejected if prior approval from HTP is not obtained in advance of a full unit replacement. Final determination will be made as part of the warranty claim process.

**When submitting a warranty claim the following items are required:**

1. **Proof of purchase or installation of the product –** Typically a copy of the invoice from the installing contractor, the receipt of the purchase of the product, or an original certificate of occupancy for a new home.
2. **Clear pictures (or video) of the following:**
   a. Serial number tag (sticker)
   b. The product
   c. The product issue / failure whenever possible
   d. A picture of the piping near the product
   e. For gas fired products, a picture of the venting, including how it exits the building

All claims will be reviewed by HTP within three (3) business days. If additional information is required and requested by the HTP Claims Department you will have thirty (30) days to provide it. When all requested information is provided HTP will respond within three (3) business days. The claim will be automatically closed if requested information is not provided within thirty (30) days. Claims will not be reopened without HTP Warranty Supervisor approval.

During the claims process a product that must be replaced will be given a designation of either a) field scrap, or b) return to HTP. If the product must be returned to HTP, the returned product must arrive at HTP within thirty (30) days of the date of our request to return the product. After receipt of the returned product HTP may require as many as thirty (30) additional days for product testing. **NOTE: Any components or heaters returned to HTP for warranty analysis will become the property of HTP and will not be returned, even if credit is denied.**

If you have questions about the coverage of this warranty, please contact HTP at the following address or phone number: HTP, 272 Duchaine Blvd., New Bedford, MA, 02745, Attention: Warranty Service Department, 1(800) 323-9651.

## SERVICE, LABOR AND SHIPPING COSTS

Except when specifically prohibited by the applicable state law, the Owner, and not the Manufacturer, shall be liable for and shall pay for all charges for labor or other expenses incurred in the removal, repair, or replacement of the water heater or any component part(s) claimed to be defective or any expense incurred to remedy any defect in the product. Such charges include, but are not necessarily limited to:

1. All freight, shipping, handling, and delivery costs of forwarding a new water heater or replacement part(s) to the owner.
2. All costs necessary or incidental in removing the defective water heater or component part(s) and installing a new water heater or replacement part(s).
3. All administrative fees incurred by the Owner, as well as material required to complete, and/or permits required for, installation of a new water heater or replacement part(s), and
4. All costs necessary or incidental in returning the defective water heater or component part(s) to a location designated by the manufacturer.

## LIMITATIONS OF YOUR HTP WARRANTY AND REMEDIES

**THE FOREGOING WARRANTIES ARE EXCLUSIVE AND ARE GIVEN AND ACCEPTED TO THE FURTHEST EXTENT UNDER APPLICABLE LAW IN LIEU OF ANY AND ALL OTHER WARRANTIES, EXPRESS OR IMPLIED, INCLUDING WITHOUT LIMITATION THE IMPLIED WARRANTIES OF MERCHANTABILITY AND FITNESS FOR A PARTICULAR PURPOSE AND ANY OBLIGATION, LIABILITY, RIGHT, CLAIM OR REMEDY IN CONTRACT OR TORT, WHETHER OR NOT ARISING FROM HTP'S NEGLIGENCE, ACTUAL OR IMPUTED. THE REMEDIES OF THE OWNER SHALL BE LIMITED TO THOSE PROVIDED HEREIN TO THE EXCLUSION OF ANY OTHER REMEDIES INCLUDING WITHOUT LIMITATION, INCIDENTAL OR CONSEQUENTIAL DAMAGES, SAID INCIDENTAL AND CONSEQUENTIAL DAMAGES INCLUDING, BUT NOT LIMITED TO, PROPERTY DAMAGE, LOST PROFIT OR DAMAGES ALLEGED TO HAVE BEEN CAUSED BY ANY FAILURE OF HTP TO MEET ANY OBLIGATION UNDER THIS AGREEMENT INCLUDING THE OBLIGATION TO REPAIR AND REPLACE SET FORTH ABOVE. NO AGREEMENT VARYING OR EXTENDING THE FOREGOING WARRANTIES, REMEDIES OR THIS LIMITATION WILL BE BINDING UPON HTP. UNLESS IN WRITING AND SIGNED BY A DULY AUTHORIZED OFFICER OF HTP. THE WARRANTIES STATED HEREIN ARE NOT TRANSFERABLE AND SHALL BE FOR THE BENEFIT OF THE ORIGINAL OWNER ONLY.**

## NO OTHER WARRANTIES

This warranty gives the Owner specific legal rights. The Owner may also have other rights that vary from state to state. Some states do not allow the exclusion or limitation of incidental or consequential damages so this limitation or exclusion may not apply to the Owner.

These are the only written warranties applicable to this water heater manufactured and sold by HTP. HTP neither assumes nor authorizes anyone to assume for it any other obligation or liability in connection with said water heaters.

HTP reserves the right to change specifications or discontinue models without notice.

**Maintenance Notes**

| Customer Installation Record Form | |
|---|---|
| The following form should be completed by the qualified installer / service technician for you to keep as a record of the installation in case of a warranty claim. After reading the important notes at the bottom of the page, please also sign this document. | |
| Customer's Name | |
| Date of Installation | |
| Installation Address | |
| Product Name / Serial Number(s) | |
| Comments | |
| Installer's Code / Name | |
| Installers Phone Number | |
| Signed by Installer | |
| Signed by Customer | |
| Installation Notes | |

**IMPORTANT**
Customer: Please only sign after the qualified installer / service technician has fully reviewed the installation, safety, proper operation, and maintenance of the system. If the system has any problems please call the qualified installer / service technician. If you are unable to make contact, please call your sales representative.
Distributor / Dealer: Please insert contact details.