Mod Con

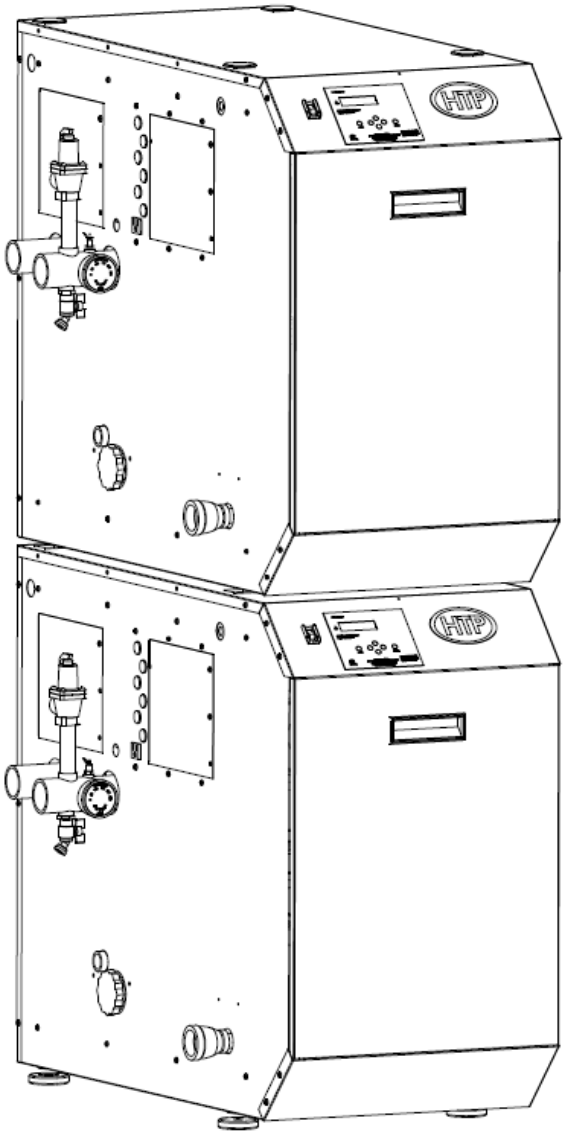

INSTALLATION

START-UP

MAINTENANCE

PARTS

Models
1000 / 1700*

****Boilers with a Suffix of C Equipped with High and Low Gas Pressure Switches***

ULTRA Low NOx Emissions SCAQMD Rule 1146.2

Heat Exchanger Bears the ASME "H" Stamp

⚠ DANGER

This manual must only be used by a qualified heating installer/service technician. Read all instructions in this manual before installing. Perform steps in the order given. Failure to comply could result in substantial property damage, severe personal injury, or death.

NOTICE: *HTP reserves the right to make product changes or updates without notice and will not be held liable for typographical errors in literature.*

NOTE TO CONSUMER: PLEASE KEEP ALL INSTRUCTIONS FOR FUTURE REFERENCE.

120 Braley Rd. P.O. Box 429 East Freetown, MA 02717 www.htproducts.com
LP- 428 REV. 9.2.14

⚠ WARNING

IF THE INFORMATION IN THIS MANUAL IS NOT FOLLOWED EXACTLY, A FIRE OR EXPLOSION MAY RESULT, CAUSING PROPERTY DAMAGE, PERSONAL INJURY, OR LOSS OF LIFE. DO NOT STORE GASOLINE OR OTHER FLAMMABLE VAPORS AND LIQUIDS IN THE VICINITY OF THIS OR ANY OTHER APPLIANCE.

WHAT TO DO IF YOU SMELL GAS

- Do not try to light any appliance.
- Do not touch any electrical switch.
- Do not use any phone in your building.
- Immediately call your gas supplier from a neighbor's phone. Follow the gas supplier's instructions.
- If you cannot reach your gas supplier, call the fire department. Installation and service must be provided by a qualified installer, service agency, or the gas supplier.

FOR YOUR SAFETY READ BEFORE OPERATING

WARNING: If you do not follow these instructions exactly, a fire or explosion may result, causing property damage, personal injury or loss of life.

A. This appliance does not have a pilot. It is equipped with an ignition device which automatically lights the burner. Do not try to light the burner by hand.

B. BEFORE OPERATING smell all around the appliance area for gas. Be sure to smell next to the floor because some gas is heavier than air and will settle on the floor.

WHAT TO DO IF YOU SMELL GAS

- **Do not try to light any appliance**
- **Do not touch any electric switch; do not use any phone in your building**
- **Immediately call your gas supplier from a neighbor's phone. Follow the gas suppliers' instructions.**
- **If you cannot reach your gas supplier, call the fire department.**

C. Use only your hand to turn the gas control knob. Never use tools. If the handle will not turn by hand, don't try to repair it, call a qualified service technician. Force or attempted repair may result in a fire or explosion.

D. Do not use this appliance if any part has been under water. Immediately call a qualified service technician to inspect the appliance and to replace any part of the control system and any gas control which has been under water.

OPERATING INSTRUCTIONS

1. **STOP! Read the safety information above.**
2. **Set the thermostat to lowest setting.**
3. **Turn off all electric power to the appliance.**
4. **This appliance is equipped with an ignition device which automatically lights the burner. Do not try to light the burner by hand.**

GAS VALVE ON

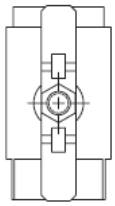

GAS VALVE OFF

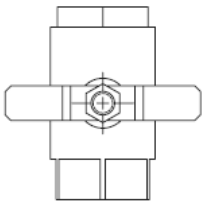

5. **Remove front cover.**
6. **Turn gas shutoff valve to "off". Handle will be across the piping, do not force.**
7. **Wait five (5) minutes to clear out any gas. If you then smell gas, STOP! Follow "B" in the safety information above on this label. If you don't smell gas, go to next step.**
8. **Turn gas shutoff valve to "on". Handle will be in line with piping.**
9. **Install Front Cover.**
10. **Turn on all electric power to appliance.**
11. **Set thermostat to desired setting.**
12. **If the appliance will not operate, follow the instructions "To Turn Off Gas To Appliance" and call your service technician or gas supplier.**

TO TURN OFF GAS TO APPLIANCE

1. **Set the thermostat to lowest setting.**
2. **Turn off all electric power to the appliance if service is to be performed.**
3. **Remove Front Cover.**
4. **Turn gas shutoff valve to "off". Handle will be across the piping. Do not force.**
5. **Install Front Cover.**

LP-175 Rev. 4 3-11-08

SPECIAL ATTENTION BOXES

The following defined terms are used throughout this manual to bring attention to the presence of hazards of various risk levels, or to important product information.

⚠ DANGER

DANGER indicates an imminently hazardous situation which, if not avoided, will result in death or serious injury.

⚠ WARNING

WARNING indicates a potentially hazardous situation which, if not avoided, could result in death or serious injury.

⚠ CAUTION

CAUTION indicates a potentially hazardous situation which, if not avoided, may result in minor or moderate injury.

CAUTION

CAUTION used without the safety alert symbol indicates a potentially hazardous situation which, if not avoided, may result in property damage.

NOTICE

NOTICE is used to address practices not related to personal injury.

FOREWORD

This manual is intended to be used in conjunction with other literature provided with the appliance. This includes all related control information. It is important that this manual, all other documents included with this system, and additional publications including the *National Fuel Gas Code, ANSI Z223.1-2002*, be reviewed in their entirety before beginning any work.

Installation should be made in accordance with the regulations of the Authority Having Jurisdiction, local code authorities, and utility companies which pertain to this type of water heating equipment.

Authority Having Jurisdiction (AHJ) – The Authority Having Jurisdiction may be a federal, state, local government, or individual such as a fire chief, fire marshal, chief of a fire prevention bureau, labor department or health department, building official or electrical inspector, or *others having statutory authority*. In some circumstances, the property owner or his/her agent assumes the role, and at government installations, the commanding officer or departmental official may be the AHJ.

NOTE: HTP, Inc. reserves the right to modify product technical specifications and components without prior notice.

FOR THE INSTALLER

⚠ DANGER

This manual must only be used by a qualified heating installer/service technician. Read all instructions in this manual before installing. Perform steps in the order given. Failure to comply could result in substantial property damage, severe personal injury, or death.

This appliance must be installed by qualified and licensed personnel. The installer should be guided by the instructions furnished with the boiler, and with local codes and utility company requirements. In the absence of local codes, preference should be given to the National Fuel Gas Code, ANSI Z223.1-2002.

INSTALLATIONS MUST COMPLY WITH:
Authority Having Jurisdiction, local, state, provincial, and national codes, laws, regulations and ordinances.

The latest version of the *National Fuel Gas Code, ANSI Z223.1*, from American Gas Association Laboratories, 8501 East Pleasant Valley Road, Cleveland, OH 44131.

In Canada – *CGA No. B149* (latest version), from Canadian Gas Association Laboratories, 55 Scarsdale Road, Don Mills, Ontario, Canada M3B 2R3. Also, *Canadian Electrical Code C 22.1*, from Canadian Standards Association, 5060 Spectrum Way, Suite 100, Mississauga, Ontario, Canada L4W 5N6.

Code for the Installation of Heat Producing Appliances (latest version), from American Insurance Association, 85 John Street, New York, NY 11038.

The latest version of the *National Electrical Code, NFPA No. 70*.

NOTE: The gas manifold and controls met safe lighting and other performance criteria when the boiler underwent tests specified in *ANSI Z21.13* – latest edition.

⚠ WARNING

The hydronic supply and return connections of these products are for installation in closed loop systems ONLY! Use of this product in any manner other than described in this manual may result in premature product failure, substantial property damage, severe personal injury, or death. Damage or failure of this product (or the system in which it is installed) due to unauthorized use **IS NOT COVERED BY WARRANTY**.

NOTICE

The CSD-1 ASME Code, Section CW-400 requires that hot water heating and supply boilers have a) a UL 353 temperature control device, b) at least one (1) temperature-actuated control to shut off the fuel supply when system water reaches a preset operating temperature, c) a high temperature limit control that prevents the water temperature from exceeding the maximum allowable temperature by causing a safety shutdown and lockout, and d) its own sensing element and operating switch.

The temperature control system integrated into the 926 control provided with this heating appliance complies with the requirements of CSD-1 Section CW-400 as a temperature operation control. The control monitors the temperature difference between the inlet and the outlet sensor, which is affected by boiler water flow. If this temperature difference exceeds 55°F (typically because of low water flow or very low heat load), the control will reduce the maximum fan speed. If the temperature difference exceeds 60°F, the control will effectively sense there is little or no water flow or heat load and shut the boiler down. The controller will restart automatically once the temperature difference has dropped below 55°F and the minimum off time (anti-cycle time) has expired. In addition, if the control senses that the outlet water temperature has reached 210°F, the boiler is put into a hard lockout and requires manual reset to restart.

TABLE OF CONTENTS

PART 1 – GENERAL SAFETY INFORMATION 7

A. PRECAUTIONS 7

B. GAS 7

C. IMPROPER COMBUSTION 7

D. WHEN SERVICING THE BOILER 7

E. BOILER OPERATION 8

F. BOILER WATER 8

G. FREEZE PROTECTION 8

PART 2 – BEFORE YOU START 8

A. WHAT'S IN THE BOX 8

B. HOW BOILER OPERATES 8

C. OPTIONAL EQUIPMENT 9

PART 3 – PREPARE BOILER LOCATION 10

A. BEFORE LOCATING THE BOILER 10

B. FLOORING 11

C. LEVELING AND DIMENSIONS 11

D. CLEARANCES FOR SERVICE ACCESS 12

E. EXHAUST VENT AND INTAKE PIPE 13

F. PREVENT COMBUSTION AIR CONTAMINATION 13

G. REMOVING A BOILER FROM A COMMON VENT SYSTEM 14

H. UNCRATING AND MOVING BOILER 14
PART 4 – BOILER PIPING 15
A. GENERAL PIPING INFORMATION 15
B. RELIEF VALVE 15
C. BACKFLOW PREVENTER 16
D. SYSTEM WATER PIPING METHODS 16
E. CIRCULATORS 17
F. HYDRONIC PIPING WITH CIRCULATORS, ZONE VALVES, AND MULTIPLE BOILERS 17
G. CIRCULATOR SIZING 18
H. FILL AND PURGE HEATING SYSTEM 19
I. FREEZE PROTECTION FLUIDS 20
J. ZONING WITH ZONE VALVES 20
K. ZONING WITH CIRCULATORS 20
L. MULTIPLE BOILERS 20
M. BOILER PIPING DETAILS 21
PART 5 – VENTING, COMBUSTION AIR AND CONDENSATE REMOVAL 25
A. GENERAL 25
B. APPROVED MATERIALS FOR EXHAUST VENT AND INTAKE PIPE 25
D. REQUIREMENTS FOR INSTALLATION IN CANADA 26
E. EXHAUST VENT AND INTAKE PIPE LOCATION 27
F. EXHAUST VENT AND INTAKE PIPE SIZING 30
G. EXHAUST VENT AND INTAKE PIPE INSTALLATION 30
H. BOILER REMOVAL FROM A COMMON VENT SYSTEM 31
I. SIDEWALL VENTING DIAGRAMS 32
J. VERTICAL VENTING DIAGRAMS 33
K. ROOM AIR, INDOOR COMBUSTION, AND VENTILATION AIR INSTALLATION REQUIREMENTS 34
PART 6 – GAS PIPING 35
A. GAS CONNECTION 35
B. GAS PIPING 36
C. GAS TABLE 36
D. CHECK INLET GAS PRESSURE 37
E. GAS VALVE 38
PART 7 – FIELD WIRING 40
A. INSTALLATION MUST COMPLY WITH: 40
B. FIELD WIRING 40
C. LINE VOLTAGE WIRING FOR STANDARD BOILER 40
D. ALARM CONNECTIONS (TOP BOILER CONNECTION) 40
E. LOW VOLTAGE CONNECTIONS 41
F. THERMOSTAT 41
G. OUTDOOR SENSOR 41
H. INDIRECT SENSOR (TOP BOILER CONNECTION) 41

I. OPTIONAL 0-10 VOLT BUILDING CONTROL SIGNAL 41
J. OPTIONAL HIGH GAS PRESSURE SWITCH 42
K. OPTIONAL LOW GAS PRESSURE SWITCH 42
L. OPTIONAL FLOW SWITCH 42
M. OPTIONAL UL353 LOW WATER CUT-OFF INTERFACE KIT 42
N. WIRING OF THE CASCADE SYSTEM COMMUNICATION BUS 43
PART 8 – START-UP PREPARATION 46
A. CHECK / CONTROL WATER CHEMISTRY 47
B. FREEZE PROTECTION (WHEN USED) 47
C. FILL AND TEST WATER SYSTEM 48
D. PURGE AIR FROM WATER SYSTEM 48
E. CHECK FOR GAS LEAKS 49
F. CHECK THERMOSTAT CIRCUIT(S) 49
G. CONDENSATE REMOVAL 49
H. FINAL CHECKS BEFORE STARTING BOILER 50
I. CASCADE SYSTEM 50
PART 9 – START-UP PROCEDURE 51
A. CONTROL OVERVIEW 51
B. NAVIGATION OF THE DISPLAY 51
C. OPERATING INSTRUCTIONS 52
D. PROGRAMMING BOILER SETTINGS 52
E. PROGRAMMING THE SYSTEM SETTING 53
F. SYSTEM SETTING PROGRAM NAVIGATION 53
G. RESETTING THE MAINTENANCE SCHEDULE 55
PART 10 – START-UP PROCEDURES FOR INSTALLER 56
A. BOILER CONTROL STATUS MENU 56
B. BOTTOM BOILER (MASTER) MENU ONLY 58
C. BOILER TEST MODE 58
PART 11 – SHUTDOWN 59
A. SHUTDOWN PROCEDURE 59
B. VACATION PROCEDURE 59
C. FAILURE TO OPERATE 59
PART 12 – TROUBLESHOOTING 59
A. BOILER ERROR CODE 59
B. BOILER ERROR 59
C. BOILER FAULT 60
D. USER INTERFACE DISPLAY 60
PART 13 – MAINTENANCE 65
A. MAINTENANCE PROCEDURES 65
B. COMBUSTION CHAMBER COIL CLEANING INSTRUCTIONS FOR HEATER 65
BOILER START-UP REPORT 73

MAINTENANCE REPORT **73**

MAINTENANCE NOTES **77**

HTP CUSTOMER INSTALLATION RECORD FORM **78**

PART 1 – GENERAL SAFETY INFORMATION

A. PRECAUTIONS

This appliance is for indoor installations only. Clearance to combustible materials: 0" top, bottom, sides and back. Front must have room for service, 24" recommended. (A combustible door or removable panel is acceptable front clearance.) This appliance has been approved for closet installation. Do not install this appliance directly on carpeting. This appliance may be installed on combustible flooring. For use with Category IV vent systems only.

⚠ WARNING

INSTALLER – Read all instructions in this manual before installing. Perform steps in the order given.

USER – This manual is for use only by a qualified heating installer/service technician. Refer to user's information manual for your reference. Have this boiler serviced/inspected by a qualified service technician annually.

FAILURE TO ADHERE TO THE GUIDELINES ON THIS PAGE AND HAVE THIS BOILER SERVICED/INSPECTED ANNUALLY CAN RESULT IN SUBSTANTIAL PROPERTY DAMAGE, SEVERE PERSONAL INJURY, OR DEATH.

⚠ WARNING

DO NOT USE THIS APPLIANCE IF ANY PART HAS BEEN SUBMERGED IN WATER. Immediately call a qualified service technician. The appliance MUST BE replaced if it has been submerged. Attempting to operate an appliance that has been submerged could create numerous harmful conditions, such as a potential gas leakage causing a fire and/or explosion, or the release of mold, bacteria, or other harmful particulates into the air. Operating a previously submerged appliance could result in property damage, severe personal injury, or death.

NOTE: Appliance damage due to flood or submersion is considered an Act of God, and IS NOT covered under product warranty.

NOTE: If the boiler is exposed to the following, do not operate until all corrective steps have been made by a qualified serviceman:

- FIRE
- DAMAGE
- WATER

Any claims for damage or shortage in shipment must be filed immediately against the transportation company by the consignee.

CAUTION

Due to low water content of the boiler, improperly sizing the boiler in regard to heating system load will result in excessive boiler cycling and accelerated component failure. HTP **DOES NOT** warrant failures caused by improperly sized boiler applications. **DO NOT** oversize the boiler to the system. Modular boiler installations greatly reduce the likelihood of boiler oversizing**.**

B. GAS

Should overheating occur or gas supply fail to shut off, do not turn off or disconnect electrical supply to the circulator. Instead, shut off the gas supply at a location external to the appliance.

C. IMPROPER COMBUSTION

⚠ WARNING

Do not obstruct the flow of combustion and ventilating air. Adequate air must be provided for safe operation. Failure to keep the exhaust vent and intake pipe clear of ice, snow, or other debris could result in property damage, serious personal injury, or death.

D. WHEN SERVICING THE BOILER

- To avoid electric shock, disconnect electrical supply before performing maintenance.
- To avoid severe burns, allow boiler to cool before servicing.

E. BOILER OPERATION

- Do not block flow of combustion or ventilation air to boiler.
- Should overheating occur or gas supply fail to shut off, do not turn off or disconnect electrical supply to circulator. Instead, shut off the gas supply at a location external to the appliance.
- Do not use this boiler if any part has been under water. Immediately call a qualified service technician to inspect the boiler and replace any part of the control system and any gas control that has been under water.

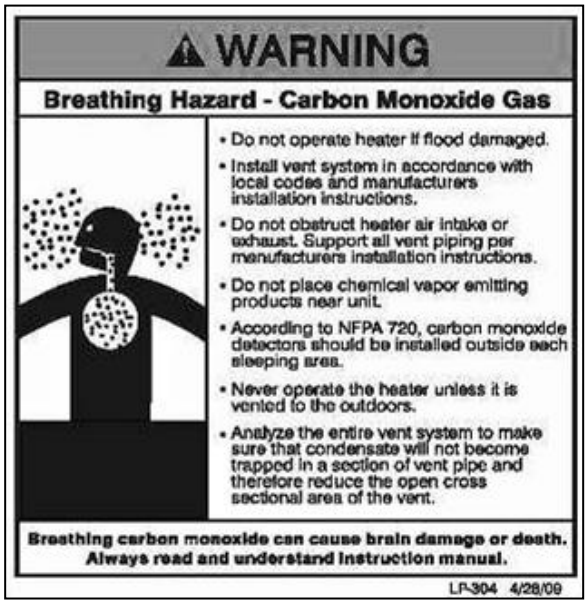

F. BOILER WATER

- Do not use petroleum-based cleaning or sealing compounds in a boiler system. These products may damage gaskets and seals in the system. This can result in substantial property damage.
- Do not use “homemade cures” or “boiler patent medicines”. Substantial property damage, damage to boiler, and/or serious personal injury may result.
- Continual fresh make-up water will reduce boiler life. Mineral buildup reduces heat transfer, overheats the stainless steel heat exchanger, and causes failure. Addition of oxygen by make-up water can cause internal corrosion in system components. Leaks in the boiler or piping must be repaired at once.
- If you have an old system with cast iron radiators, thoroughly flush the system (without boiler connected) to remove sediment. The high-efficiency heat exchanger can be damaged by build-up or corrosion due to sediment.

G. FREEZE PROTECTION

⚠ WARNING

NEVER use any toxic chemical, including automotive, standard glycol antifreeze, or ethylene glycol made for hydronic (non-potable) systems. These chemicals can attack gaskets and seals in water boilers, are poisonous if consumed, and can cause injury or death.

CAUTION

Consider piping and installation when determining boiler location**.**

NOTE: Damages resulting from incorrect installation or from use of products not approved by HTP, Inc. ARE NOT covered by warranty.

PART 2 – BEFORE YOU START

A. WHAT’S IN THE BOX

Also included with the boiler:

- Pressure and Temperature Gauge
- Outdoor Sensor
- Exhaust / Intake Screens
- Installation Manual
- Warranty
- CSD-1 Form
- H-3 Data Sheet

B. HOW BOILER OPERATES

Mod Con boilers are designed to meet the needs of the most challenging new and retrofit installations. Mod Con 1000 and 1700 models incorporate two individual heating systems that are piped, wired, and programmed to work as one, providing built-in system redundancy and maximum turndown and efficiency. Outlined below are features of the system and how each operates.

Stainless Steel Heat Exchanger - The highly efficient stainless steel heat exchanger is designed to use the cold return water from the system and extract the last bit of heat before it is exhausted.

Modulating Combustion System - The combustion system will modulate the output of the burner during operation to match the system demand and achieve the control set point while in operation. The set point can change by internal or external signals which enhance the overall performance of the system.

Control – The integrated control system monitors the system and regulates fan speed, controlling the output of each boiler and staging the individual heating circuits to maximize overall efficiency. This allows the Mod Con to deliver only the amount of heat energy required and nothing more. The system can be further enhanced by installing with an indirect water heater to provide domestic hot water.

The control can regulate the output of multiple boilers through its cascade system function. The cascade system is capable of connecting up to eight boilers together in such a way that they function as one boiler system. This allows for greater turn down ratios and provides systematic control of the multiple boilers in an installation to minimize downtime and maximize efficiency.

The cascade system works by establishing one boiler as the master and the other connected boilers as followers. The master boiler requires a cascade system sensor and a cascade pump in addition to its own boiler pump. Each of the follower boilers has an individual pump.

System Display and Operational LED Light Indicators – The display allows the user to change the system parameters and monitor system outputs.

Gas Valve – Senses suction from the blower, allowing gas to flow only if powered and combustion air is flowing.

Integrated Venturi (1000 Models) or Swirl Plate (1700 Models) – Controls air and gas flow into the burner.

Burner – Constructed of high grade stainless steel, the burner uses premixed air and gas fuel to provide a wide range of firing rates.

Spark Ignition – The burner is ignited by applying high voltage through the system spark electrode. This causes the spark from the electrode to ignite mixed gas from the burner.

Supply Water Temperature Sensor – This sensor monitors the boiler outlet water temperature (System Supply). The control adjusts the boiler firing rate so the supply temperature will match the boiler set point.

Return Water Temperature Sensor – This sensor monitors the boiler return water temperature (System Return).

Temperature and Pressure Gauge – Allows the user to monitor system temperature and pressure.

Electrical field connections with terminal strips – The electrical cover allows easy access to the line voltage and low voltage terminals strips which are clearly marked to facilitate wiring of the boiler.

Condensation Collection System – This boiler is a high efficiency appliance, therefore the boiler will produce condensate. The collection system has a float switch which monitors the condensation level and prevents condensation from backing up into the combustion system. Inside the collection system there is a built in trap which seals the combustion system from the connected drain. This condensate should be neutralized to avoid damage to the drainage system or piping.

Flow Protection – The optional flow switch is designed to protect the boiler in the event of low flow conditions. The boiler control will also monitor flow through the heat exchanger by monitoring the return and supply sensors and will shut down the burner before overheating occurs.

Outdoor Sensor – This sensor monitors outdoor temperature. Data from this sensor is monitored by the control, which adjusts the unit set point to provide greater efficiency.

Indirect Tank Sensor (optional) – Monitors storage tank temperature.

C. OPTIONAL EQUIPMENT

Below is a list of optional equipment available from HTP. These additional options may be purchased through your HTP distributor.

- System Sensor (Part # 7250P-324)
- Indirect Tank Sensor (Part # 7250P-325)
- 6” Stainless Steel Outside Termination Vent Kit (V3000)
- High and Low Gas Pressure Switch Kit with Manual Reset (Part # 7350P-600)
- U.L. 353 Compliant Low Water Cut-Off Interface Kit with Manual Reset (Part # 7350P-601)
- Alarm System (Part # 7350P-602) (to monitor any failure)
- PC Connection Kit (Part # 7250P-320)
- Condensate Neutralizer (Part # 7350P-611)
- Caster Kit (Part # 7350P-604)
- Flow Switch Kit (Part # 7350P-605)
- Stainless to PVC Vent Adapter (6” - Part # 7350P-275, 8” Part # 7350P-375)

NOTE: When using an optional system sensor, pipe insulation must be wrapped around it to improve temperature measurement accuracy and increase overall system efficiency.

PART 3 – PREPARE BOILER LOCATION

CAUTION

Carefully consider installation when determining boiler location. Please read the entire manual before attempting installation. Failure to properly take factors such as boiler venting, piping, condensate removal, and wiring into account before installation could result in wasted time, money, and possible property damage and personal injury.

A. BEFORE LOCATING THE BOILER

⚠ WARNING

Incorrect ambient conditions can lead to damage to the heating system and put safe operation at risk. Ensure that the boiler installation location adheres to the information included in this manual. Failure to do so could result in property damage, serious personal injury, or death.

CAUTION

Failure of boiler or components due to incorrect operating conditions IS NOT covered by product warranty.

1. Installation Area (Mechanical Room) Operating Conditions
   - Ensure ambient temperatures are higher than 32°F/0°C and lower than 104°F/40°C.
   - Prevent the air from becoming contaminated by the products, places, and conditions listed in this manual, Part 3, Section F.
   - Avoid continuously high levels of humidity
   - Never close existing ventilation openings

CAUTION

The service life of the boiler's exposed metallic surfaces, such as the casing, as well as internal surfaces, such as the heat exchanger, are directly influenced by proximity to damp and salty marine environments. In such areas, higher concentration levels of chlorides from sea spray coupled with relative humidity can lead to degradation of the heat exchanger and other boiler components. In these environments, boilers must not be installed using direct vent systems which draw outdoor air for combustion. Such boilers must be installed using room air for combustion. Indoor air will have a much lower relative humidity and, hence, potential corrosion will be minimized.

⚠ WARNING

This boiler is certified for indoor installations only. Do not install the boiler outdoors. Failure to install this boiler indoors could result in substantial property damage, severe personal injury, or death.

2. Check for nearby connections to:
   - System water piping
   - Venting connections
   - Gas supply piping
   - Electrical power
   - Condensate drain

3. Check area around boiler. Remove any combustible materials, gasoline, and other flammable liquids.

⚠ WARNING

Failure to keep boiler area clear and free of combustible materials, liquids, and vapors can result in substantial property damage, severe personal injury, or death.

4. Gas control system components must be protected from dripping water during operation and service.

5. If the boiler is to replace an existing boiler, check for and correct any existing system problems, such as:
   - System leaks
   - Location that could cause the system and boiler to freeze and leak.
   - Incorrectly-sized expansion tank

6. Clean and flush system when reinstalling a boiler.

NOTE: This boiler must be installed within the prescribed clearances. If local building codes require additional clearance, these codes supersede HTP's. It is recommended to make note of the boiler model and serial number before finalizing installation.

B. FLOORING

⚠ WARNING

Assure that the floor and structure of the installation location are sufficient to support the full installed weight of the boiler, including water content of the heat exchanger and related piping. Failure to ensure the floor and structure of the installation location are structurally sound before installation of the boiler can result in structural failure, substantial property damage, severe personal injury, or death.

⚠ WARNING

This boiler is approved for installation on combustible flooring, but must never be installed on carpeting. Installing this boiler on carpeting could result in fire, explosion, property damage, severe personal injury, or death.

C. LEVELING AND DIMENSIONS

CAUTION

In order for the condensate to properly flow out of the collection system, the area where you locate the boiler must be level. The boiler comes equipped with leveling feet. Should you find the floor beneath the boiler is uneven, adjust the leveling feet with a wrench.

NOTE: It is recommended that the boiler be installed on a 4 – 6" raised boiler pad, rated for the weight of the fully operational boiler and related piping. If flooding is a concern, it is recommended to further elevate the boiler pad to prevent water from reaching the boiler.

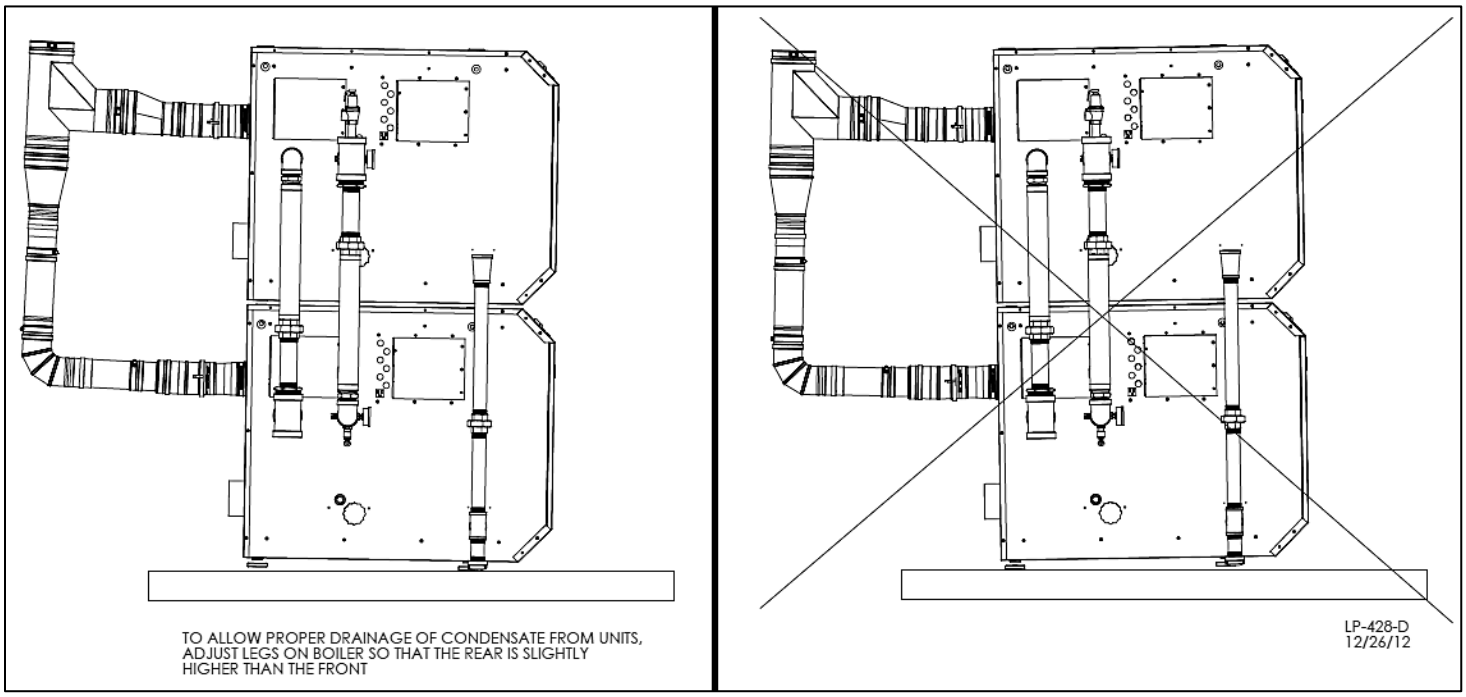

Figure 1 - Leveling

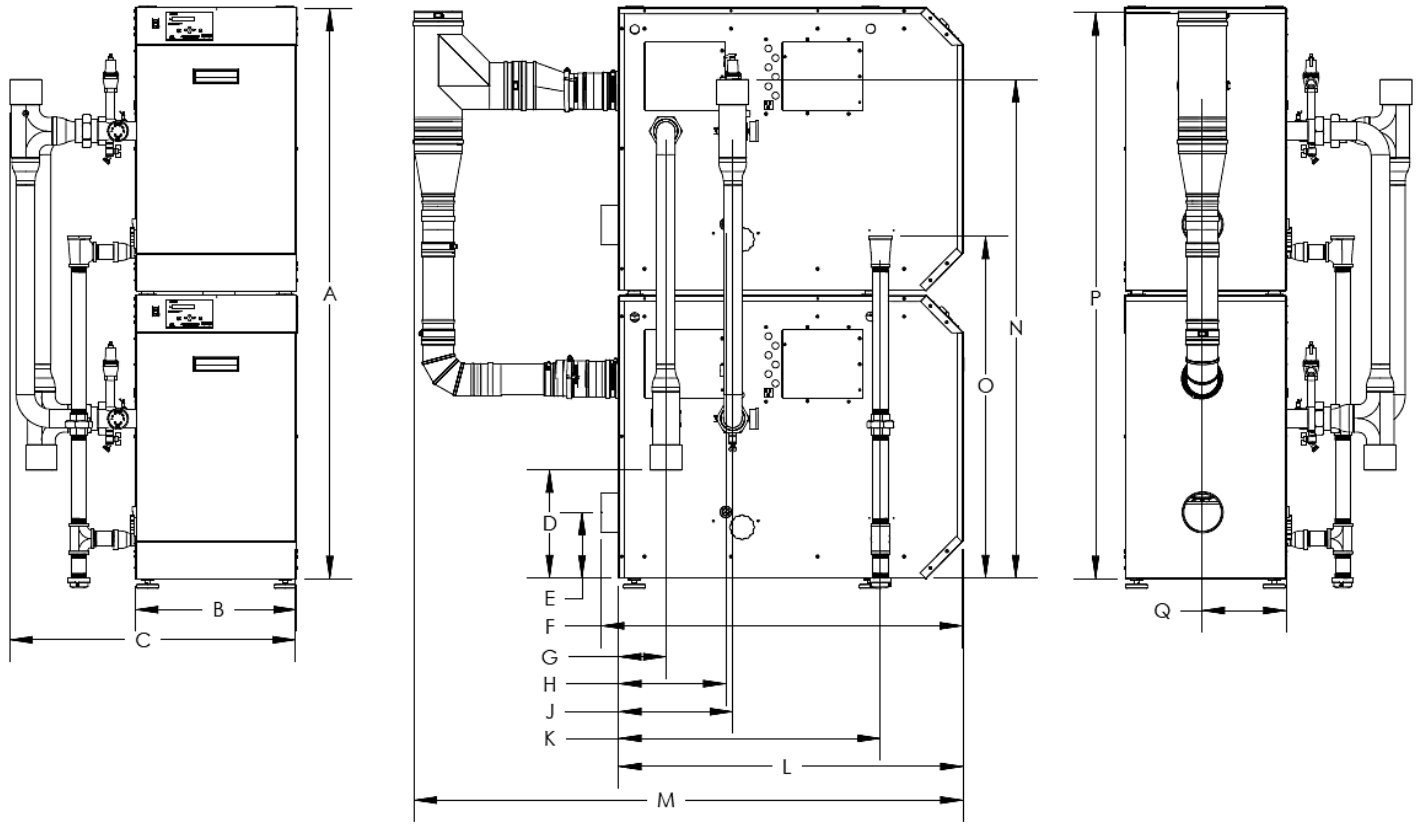

MODEL	A	B	C	D	E	F	G	H	J	K	L	M	N	O	P	Q
MODCON1000	72-1/2"	20-1/2"	36"	13-3/4"	8-3/8"	46"	6"	13-5/8"	14-1/2"	33-1/4"	43-3/4"	66-3/4"	63-1/4"	43-3/8"	72"	10-5/8"
MODCON1700	72-1/2"	20-1/2"	36"	13-3/4"	8-3/8"	64-1/2"	8-1/4"	20"	18-3/4"	43-1/2"	62-3/8"	88-1/2"	63-1/4"	59"	73-1/2"	10-5/8"

NOTE: ALL DIMENSIONS ARE APPROXIMATE AND HEIGHTS DO NOT INCLUDE ADJUSTABLE LEGS.

MODEL	BTU/HR INPUT LOW FIRE	GROSS OUTPUT BTU/HR	NET I=B=R BTU/HR	THERMAL EFFICIENCY	BOILER WATER (GAL.)	SUPPLY/RETURN CONNECTION	GAS CONNECTION	VENT DIA.	SHIPPING WEIGHT
MODCON1000	100,000	1,000,000	818,000	92	8.4	3"	2"	6"	1010
MODCON1700	170,000	1,700,005	1,390,000	92	11.6	3"	2-1/2"	8"	1160

LP-428-C
05/03/13

Figure 2 – Specifications and Dimensions

D. CLEARANCES FOR SERVICE ACCESS

See Figure 3 for recommended service clearances. If you do not provide the minimum clearances shown, it might not be possible to service the boiler without removing it from the space.

⚠ WARNING

Space must be provided with combustion / ventilation air openings correctly sized for all appliances located in the same space as the boiler. The boiler venting cover must be securely fastened to prevent it from drawing air from the boiler room. This is particularly important if the boiler is in a room with other appliances. Failure to comply with the above warnings could result in substantial property damage, severe personal injury, or death.

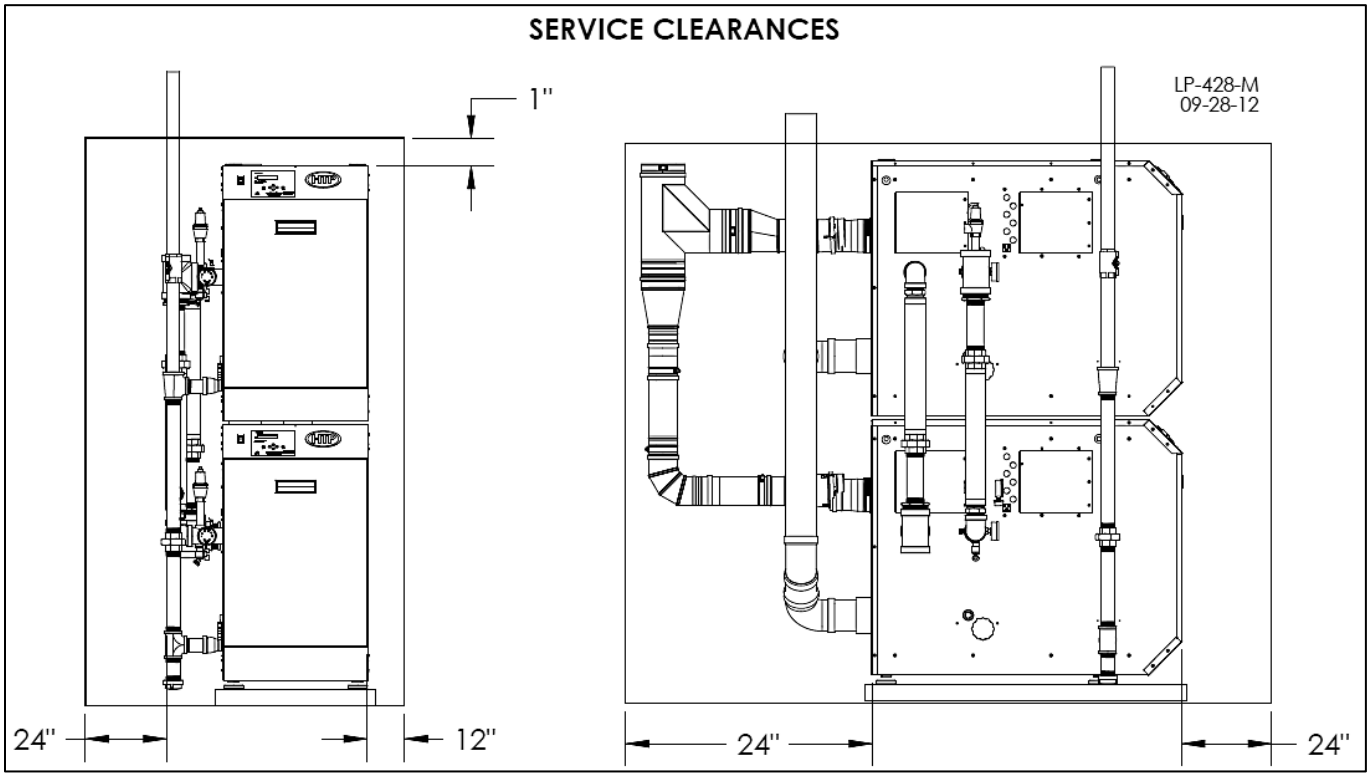

Figure 3 – Service Clearances

CAUTION
Check with your local Authority Having Jurisdiction for requirements when installing boiler. Please read the entire manual before attempting installation. Failure to properly take factors such as boiler venting, piping, condensate removal, and wiring into account before installation could result in wasted time, money, and possible property damage and personal injury.

E. EXHAUST VENT AND INTAKE PIPE

⚠ WARNING
Vents must be properly supported. The boiler exhaust and intake connections are not designed to carry heavy weight. Vent support brackets must be within 1' of the boiler and the balance at 4' intervals. Venting must be readily accessible for visual inspection for the first 3' from the boiler.

The boiler is rated ANSI Z21.13 Category IV (pressurized vent, likely to form condensate in the vent), and requires a special vent system designed for pressurized venting.

You must also install intake piping from outdoors to the boiler flue adaptor. The resultant installation is categorized as direct vent (sealed combustion). **NOTE: To prevent combustion air contamination, see** Table 1 **in this section when considering exhaust vent and intake pipe termination.**

Exhaust vent and intake pipe must terminate near each other and may be vented vertically through the roof or out a side wall. Exhaust vent and intake piping methods are detailed in the Venting Section. Do not attempt installation using any other means. Be sure to locate the boiler so exhaust vent and intake piping can be routed through the building and properly terminated. The exhaust vent and intake piping lengths, routing and termination method must all comply with methods and limits given in the venting section.

F. PREVENT COMBUSTION AIR CONTAMINATION

Install intake piping for the boiler as described in the Venting section. Do not terminate exhaust in locations that can allow contamination of intake air.

⚠ WARNING
You must pipe outside air to the boiler intake. Ensure that the intake air will not contain any of the contaminants below. For example, do not pipe intake near a swimming pool. Avoid areas subject to exhaust fumes from laundry facilities. These areas always contain contaminants. Contaminated air will damage the boiler, resulting in possible substantial property damage, severe personal injury, or death.

PRODUCTS TO AVOID	AREAS LIKELY TO HAVE CONTAMINANTS
Spray cans containing fluorocarbons	Dry cleaning/laundry areas and establishments
Permanent wave solutions	Swimming pools
Chlorinated waxes/cleaners	Metal fabrication plants
Chlorine-based swimming pool chemicals	Beauty shops
Calcium chloride used for thawing	Refrigeration repair shops
Sodium chloride used for water softening	Photo processing plants
Refrigerant leaks	Auto body shops
Paint or varnish removers	Plastic manufacturing plants
Hydrochloric or Muriatic acid	Furniture refinishing areas and establishments
Cements and glues	New building construction
Antistatic fabric softeners used in clothes dryers	Remodeling areas
Chlorine-type bleaches, laundry detergents, and cleaning solvents	Garages and workshops
Adhesives used to fasten building products	

Table 1 – Contaminants

NOTE: DAMAGE TO THE BOILER CAUSED BY EXPOSURE TO CORROSIVE VAPORS IS NOT COVERED BY WARRANTY.
(Refer to the limited warranty for complete terms and conditions).

G. REMOVING A BOILER FROM A COMMON VENT SYSTEM

⚠ DANGER

Do not install the boiler into a common vent with any other boiler. This will cause flue gas spillage or boiler malfunction, resulting in possible substantial property damage, severe personal injury, or death.

⚠ DANGER

Failure to follow all instructions can result in flue gas spillage and carbon monoxide emissions, causing severe personal injury or death.

When removing an existing boiler, the following steps must be followed.

1. Seal any unused openings in the common venting system.

2. Visually inspect the venting system for proper size and horizontal pitch to determine if there is blockage, leakage, corrosion or other deficiencies that could cause an unsafe condition.

3. If practical, close all building doors, windows and all doors between the common venting system and other spaces in the building. Turn on clothes dryers and any appliances not connected to the common venting system. Turn on any exhaust fans, such as range hoods and bathroom exhausts, at maximum speed. Do not operate a summer exhaust fan. Close all fireplace dampers.

4. Place in operation the appliance being inspected. Follow the lighting instructions. Adjust the thermostat so the appliance will operate continuously.

5. Test for spillage at the draft hood relief opening after 5 minutes of main burner operation. Use the flame of a match or candle or smoke from a cigarette.

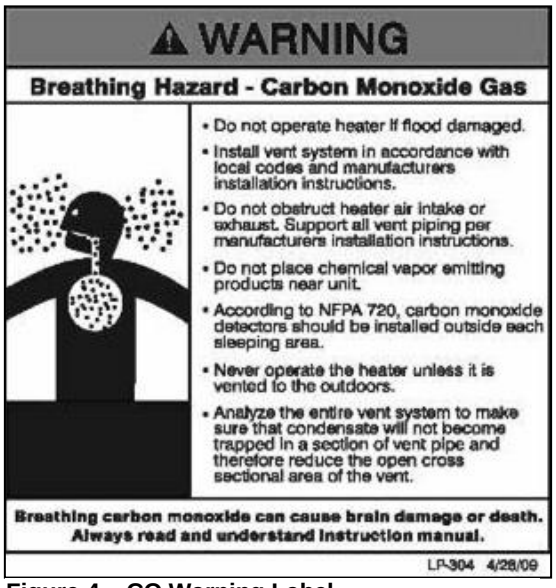

Figure 4 – CO Warning Label

6. After it has been determined that each appliance remaining connected to common venting system properly vents when tested as outlined, return doors, windows, exhaust fans, fireplace dampers and any other gas burning appliance to their previous condition of use.

7. Any improper operation of the common venting system should be corrected so the installation conforms to the *National Fuel Gas Code, ANSI Z223.1*. When resizing any portion of the common venting system, the common venting system should be resized to approach the minimum size as determined using the appropriate tables in Appendix G in the *National Fuel Gas Code, ANSI Z 223.1*.

H. UNCRATING AND MOVING BOILER

⚠ WARNING

Uncrating Boiler – Any claims for damage in shipment must be filed immediately against the transportation company by the consignee.

CAUTION

Cold Weather Handling – If boiler has been stored in a very cold location (below 0°F) before installation, handle with care until the plastic components come to room temperature.

The boiler is very heavy. If the location is not level, adjust the boiler's leveling feet to ensure a level boiler and proper flow of condensate. If surface flooring is rough, care should be taken not to catch the leveling feet and damage the boiler when moving it into position.

PART 4 – BOILER PIPING

⚠ WARNING

Failure to follow the instructions in this section WILL VOID the warranty and may result in property damage, serious injury, or death.

CAUTION

Never use dielectric unions or galvanized steel fittings when connecting to a stainless steel storage tank or boiler. Failure to follow this instruction can lead to premature failure of the boiler system. Such failures ARE NOT covered by warranty.

Plumbing of this product should only be done by a qualified, licensed plumber in accordance with all local plumbing codes. The boiler may be connected to an indirect water heater to supply domestic hot water. HTP offers 119 and 175 gallon size indirect water heaters in stainless steel or glass-lined construction. These storage tanks can be directly connected to the boiler supply and return connection.

A. GENERAL PIPING INFORMATION

CAUTION

The building piping system must meet or exceed the piping requirements in this manual.

CAUTION

Use two wrenches when tightening water piping at the appliance. Use one wrench to prevent the appliance return or supply line from turning. Failure to prevent piping connections from turning could cause damage to appliance components.

CAUTION

The control module uses temperature sensors to provide both high limit protection and modulating temperature control. The control module also provides low water protection by sensing the water level in the heat exchanger. Some codes/jurisdictions may require additional external controls.

B. RELIEF VALVE

Connect discharge piping to a safe disposal location following the guidelines on the following page.

⚠ WARNING

To avoid water damage or scalding due to relief valve operation:

- Discharge line must be connected to relief valve outlet and run to a safe place of disposal.
- Terminate the discharge line in a manner that will prevent possibility of severe burns or property damage should the relief valve discharge.
- Discharge line must be as short as possible and the same size as the valve discharge connection throughout its entire length.
- Discharge line must pitch downward from the valve and terminate at least 6" above the floor drain, making discharge clearly visible.
- Discharge line shall terminate plain, not threaded, with a material serviceable for temperatures of 375°F or greater.
- Do not pipe discharge to any location where freezing could occur.
- No shutoff valve may be installed between the relief valve and boiler or in the discharge line. Do not plug or place any obstruction in the discharge line.
- Test the operation of the relief valve after filling and pressurizing the system by lifting the lever. Make sure the valve discharges freely. If the valve fails to operate correctly, replace it with a new relief valve.
- Test relief valve at least once annually to ensure the waterway is clear. If valve does not operate, turn the boiler "off" **and call a plumber immediately.**
- Take care whenever operating relief valve to avoid scalding injury or property damage.
- For boilers installed with only a pressure relief valve, the separate storage vessel must have a temperature and pressure relief valve installed. This relief valve shall comply with *Relief Valves for Hot Water Supply Systems, ANSI Z21.22 CSA4.4*

FAILURE TO COMPLY WITH THE ABOVE GUIDELINES COULD RESULT IN FAILURE OF RELIEF VALVE OPERATION, RESULTING IN POSSIBILITY OF SUBSTANTIAL PROPERTY DAMAGE, SEVERE PERSONAL INJURY, OR DEATH.

⚠ DANGER

Water temperature over 125 degrees F. can cause severe burns instantly, or death from scalds. Children, disabled, and elderly are at highest risk of being scalded. See instruction manual before setting temperature at water heater. Feel water before bathing or showering! Temperature limiting valves are available. See chart below showing temperature burn rate.

C. BACKFLOW PREVENTER

Use a backflow preventer specifically designed for hydronic boiler installations. This valve should be installed on the cold water fill supply line per local codes (see Boiler Piping Details).

CAUTION

All piping methods shown in this manual use primary/secondary connection to the boiler loop. This is to avoid the possibility of inadequate flow through the boiler. For other piping methods, consult your local HTP representative, or refer to Boiler Piping Details in this manual.

D. SYSTEM WATER PIPING METHODS

EXPANSION TANK AND MAKE-UP WATER

1. Ensure that the expansion tank is sized to correctly handle boiler and system water volume and temperature.

BOILER WATER VOLUME	
MODEL	**GALLONS**
1000	8.4
1700	11.6

Table 2

CAUTION

Undersized expansion tanks cause system water to be lost from the relief valve, causing make-up water to be added. Eventual boiler failure can result due to excessive make-up water addition. **SUCH FAILURE IS NOT COVERED BY WARRANTY.**

2. The expansion tank must be located as shown in Boiler Piping Details, or following recognized design methods. See expansion tank manufacturer's instructions for details.

3. Connect the expansion tank to the air separator only if the separator is on the suction side of the circulator. Always install the system fill connection at the same point as the expansion tank connection to the system.

4. Most chilled water systems are piped using a closed type expansion tank.

DIAPHRAGM (OR BLADDER) EXPANSION TANK
Always install an automatic air vent on top of the air separator to remove residual air from the system.

⚠ CAUTION

DO NOT install automatic air vents on closed type expansion tank systems. Air must remain in the system and return to the tank to provide an air cushion. An automatic air vent would cause air to leave the system, resulting in improper operation of the expansion tank.

E. CIRCULATORS

⚠ CAUTION

DO NOT use the boiler circulator in any location other than the ones shown in this manual. The boiler circulator location is selected to ensure adequate flow through the boiler. Failure to comply with this caution could result in unreliable performance and nuisance shutdowns from insufficient flow.

SIZING SPACE HEAT SYSTEM PIPING
1. In all diagrams, the space heating system is isolated from the boiler loop by the primary/secondary connection.

2. Size the piping and components in the space heating system using recognized design methods.

F. HYDRONIC PIPING WITH CIRCULATORS, ZONE VALVES, AND MULTIPLE BOILERS

The boiler is designed to function in a closed loop hydronic system. The included temperature and pressure gauge allows the user to monitor system pressure and outlet temperature from the boiler. It is important to note that the boiler has a minimal amount of pressure drop that must be calculated when sizing the circulators. Each boiler installation must have an air elimination device that will remove air from the system.

Install the boiler so the gas ignition system components are protected from water (dripping, spraying, etc.). Allow clearance for basic service of the boiler circulator, valves, and other components. Observe minimum 1” clearance around all uninsulated hot water pipes when openings around pipes are not protected by non-combustible materials.

On a boiler installed above radiation level, some states and local codes require a low water cut off device. This is provided standard on the Mod Con boiler. Check with local codes for additional requirements. If the boiler supplies hot water to heating coils in air handler units, flow control valves or other devices must be installed to prevent gravity circulation of boiler water in the coils during the cooling cycle. Chilled water medium must be piped in parallel with the boiler.

Freeze protection for new or existing systems must use glycol specifically formulated for this purpose. This glycol must include inhibitors that will prevent it from attacking metallic system components. Make certain that the system fluid is checked for the correct glycol concentration and inhibitor level. The system should be tested at least once a year and as recommended by the producer of the glycol solution. Allowance should be made for the expansion of the glycol solution in the system piping. Example: 50% by volume glycol solution expands 4.8% in volume for the temperature increase from 32°F to 180°F, while water expands 3% over the same temperature rise.

CAUTION

Never use dielectric unions or galvanized steel fittings when connecting to a stainless steel storage tank or boiler. Failure to follow this instruction can lead to premature failure of the boiler system. Such failures ARE NOT covered by warranty.

CAUTION

The boiler should not be operated as a potable hot water heater. The boiler should not be used as a direct hot water heating device.

Basic steps are listed below that will guide the installation of the boiler.

1. Connect the system return marked “Boiler Return”.

2. Connect the system supply marked “Boiler Supply”.

3. Install purge and balance valve or shut off valve and drain on system return to purge air out of each zone.

4. Install a back flow preventer on the cold feed make-up water line.

5. Install a pressure reducing valve on the cold feed make-up water line (15 PSI nominal on the system return). Check temperature and pressure gauge when operating. It should read a minimum pressure of 12 PSI.

6. Install a circulator as shown in piping details (this section). Make sure the circulator is properly sized for the system and friction loss.

7. Install an expansion tank on the system supply. Consult the tank manufacturer's instructions for specific information relating to expansion tank installation. Size the expansion tank for the required system volume and capacity.

8. Install an air elimination device on the system supply.

9. Install a drain valve at the lowest point of the system. **NOTE:** The boiler cannot be drained completely of water without purging the unit with an air pressure of 15 PSI.

10. The relief valve is installed at the factory. A pipe discharge line should be installed to discharge 6" above the drain in the event of pressure relief. The pipe size must be the same size as the relief valve outlet. **NEVER BLOCK THE OUTLET OF THE SAFETY RELIEF VALVE.**

G. CIRCULATOR SIZING

In addition, the boiler heat exchanger has a minimum total water volume that must be taken into account when sizing the circulator. Minimum boiler flow rates are listed in the table below.

MODEL	MINIMUM BOILER FLOW RATE (GPM)
MODCON1000	66
MODCON1700	109

Table 3 – Minimum Boiler Flow Rates

The boiler heat exchanger does have a pressure drop which must be considered in system design. Refer to the graph in Figure 5 for pressure drop through the boiler heat exchanger.

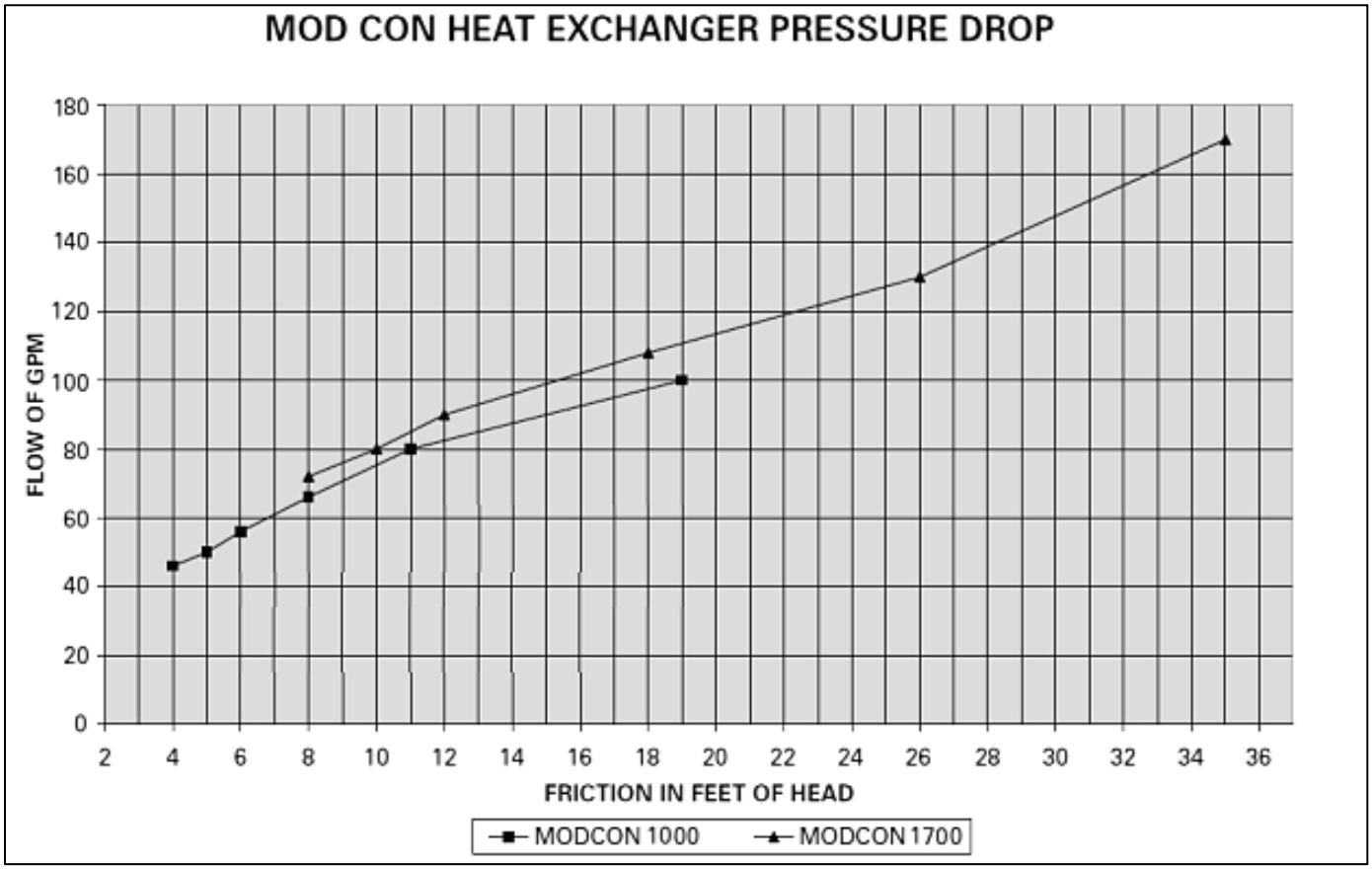

Figure 5 – Heat Exchanger Pressure Drop Chart

Table 4 represents the various system design temperature rise through the boiler, along with respective flows and friction loss which will aid in circulator selection.

SYSTEM TEMPERATURE RISE CHART

	20°Δt		25°Δt		30°Δt	
MODEL	Friction Feet	Flow GPM	Friction Feet	Flow GPM	Friction Feet	Flow GPM
MODCON1000	19	100	11	80	8	66
MODCON1700	35	170	26	130	18	109

Table 4 – Temperature Rise Chart

The chart below represents the combined flow rates and pipe sizes when using multiple boilers to design the manifold system for the primary circuit. To size, simply add up the number of boilers and the required flow rates for the system design temperature.

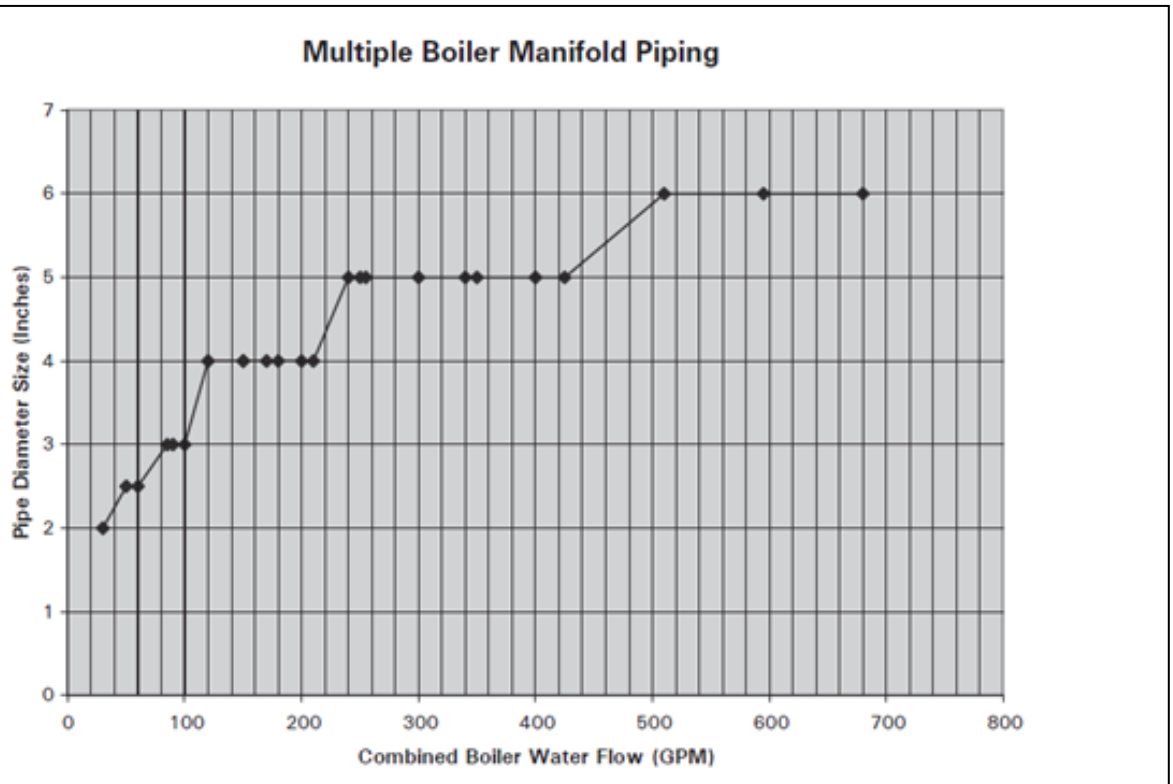

MULTIPLE BOILER MANIFOLD PIPING																							
Flow rate	30	50	60	85	90	100	120	150	170	180	200	210	240	250	255	300	340	350	400	425	510	595	680
Pipe Dia.	2"	2½"	2½"	3"	3"	3"	4"	4"	4"	4"	4"	4"	5"	5"	5"	5"	5"	5"	5"	5"	6"	6"	6"

Figure 6 – Multiple Boiler Manifold Piping

H. FILL AND PURGE HEATING SYSTEM

- Attach the hose to balance and purge hose connector or drain valve and run hose to nearest drain.
- Close the other side of the balance and purge valve or the shut off valve after the drain.
- Open first zone balance and purge or drain valve to let water flow out the hose. If zone valves are used, open the valves one at a time manually. (**NOTE:** You should check the valve manufacturer's instructions prior to opening valves manually, so as not to damage the valves.)
- Manually operate fill valve regulator. When water runs out of the hose, you will see a steady stream of water (without bubbles). Close balance and purge valve or drain to stop the water from flowing. Disconnect the hose and connect it to next zone to be purged.
- Repeat this procedure for additional zones (one at a time).

CAUTION

For installation that incorporates standing iron radiation and systems with manual vents at the high points, follow previous section and, starting with the nearest manual air vent, open until water flows out. Then close vent. Repeat procedure, working your way toward the furthest air vent. It may be necessary to install a basket strainer in an older system where larger amounts of sediment may be present. Annual cleaning of the strainer may be necessary.

Upon completion, make sure that the fill valve is in the automatic position and each zone balance and purge or shut off is in an open position and zone valves are positioned for automatic operation.

I. FREEZE PROTECTION FLUIDS

CAUTION
Use only inhibited glycol solutions which are specially formulated for hydronic systems. Ethylene glycol is toxic and can attack gaskets and seals used in hydronic systems. Glycol mixtures should not exceed 50%.

1. Glycol in hydronic applications is specially formulated for this purpose, and includes inhibitors that prevent the glycol from attacking metallic system components. Make certain that the system fluid is checked for the correct glycol concentration and inhibitor level.

2. The glycol solution should be tested at least once a year and as recommended by the glycol manufacturer.

3. Anti-freeze solutions expand more than water. For example: A 50% by volume solution expands 4.8% in volume for a temperature increase from 32°F to 180°F, while water increases 3% over the same temperature rise. Allowances must be made for this expansion in the system design.

4. A 30% mixture of glycol will result in a BTU output loss of 15% with a 5% increase in head against the system circulator.

5. A 50% mixture of glycol will result in a BTU output loss of 30% with a 50% increase in head against the system circulator.

CAUTION
It is highly recommended that you carefully follow the glycol manufacturer's recommended concentrations, expansion requirements, and maintenance recommendations (pH additive breakdown, inhibitor reduction, etc.). Carefully figure the additional friction loss in the system as well as the reduction in heat transfer coefficients.

J. ZONING WITH ZONE VALVES

1. Connect the boiler to the system as shown in Boiler Piping Details when zoning with zone valves. The primary/secondary piping shown ensures the boiler loop will have sufficient flow. It also avoids applying the high head of the boiler circulator to the zone valves.

2. Connect DHW (domestic hot water) piping to indirect storage water heater.

K. ZONING WITH CIRCULATORS

1. Connect the boiler to the system when using circulator zoning as shown in Boiler Piping Details. **NOTE:** The boiler circulator cannot be used for a zone. It must only supply the boiler loop.

2. Install a separate circulator for each zone.

3. Connect DHW (domestic hot water) piping to indirect storage water heater.

L. MULTIPLE BOILERS

1. Connect multiple boilers as shown in Boiler Piping Details.

2. All piping shown is reverse return to assure balanced flow throughout the connected boilers.

3. Each connected boiler must have its own circulator pump to assure adequate flow.

4. Connect DHW (domestic hot water) piping to indirect storage water heater.

5. The system flow (secondary loop) must be greater than the primary (boiler) loop flow.

M. BOILER PIPING DETAILS

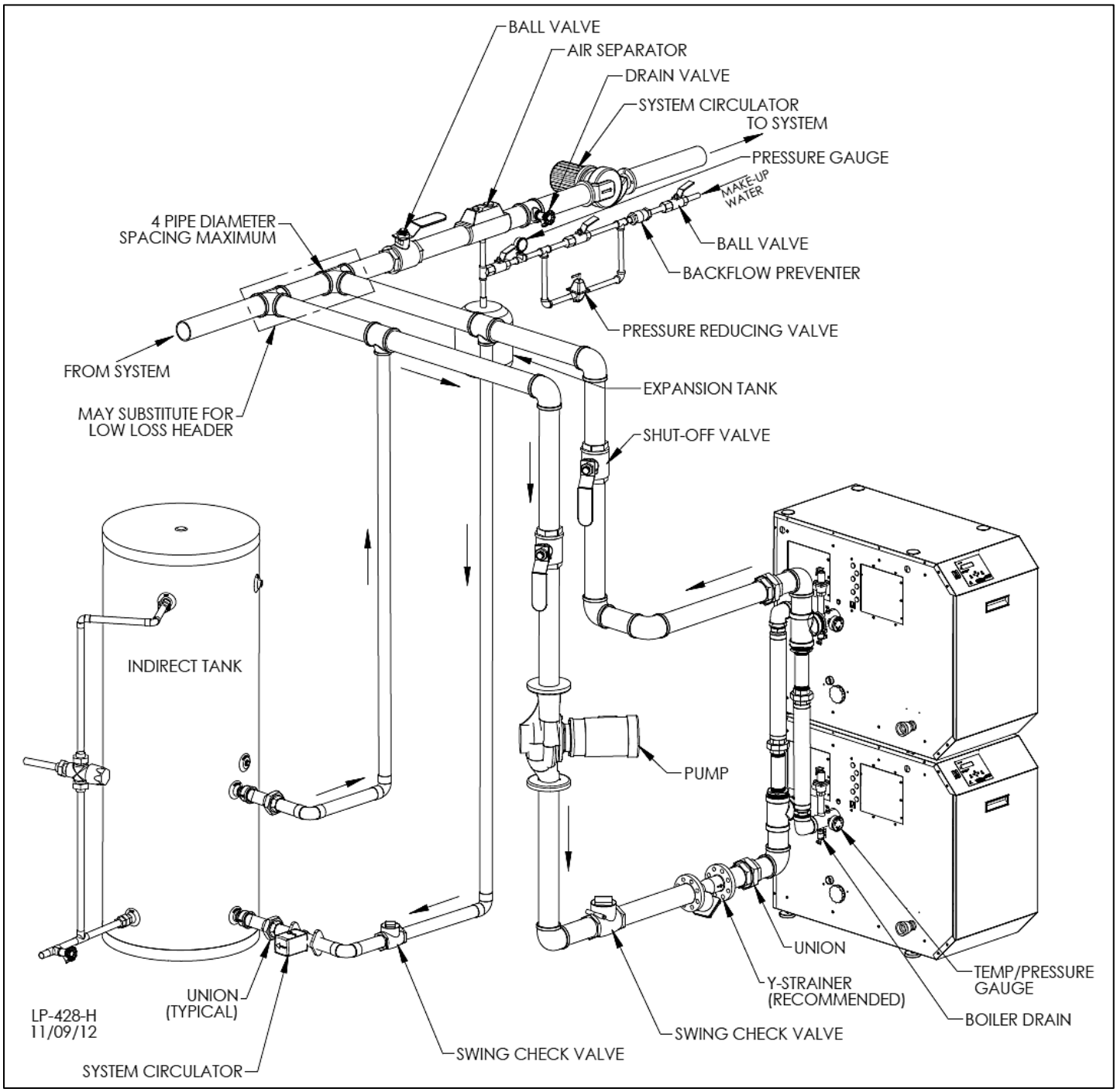

Figure 7 – Single Boiler Space Heating – Indirect Priority

FIGURE NOTES:

1. This drawing is meant to demonstrate system piping concept only.
2. A mixing valve is recommended if the DHW temperature is set above the factory setting of 119°F.
3. Install a minimum of 12 diameters of straight pipe upstream of all circulators.
4. Install a minimum of 6 diameters of straight pipe up and downstream of all closely spaced tees.
5. Piping shown is Primary/Secondary.
6. The minimum pipe size for connecting an HTP indirect fired water heater is 1”.
7. The minimum pipe size for connecting a Mod Con boiler is 3” minimum for both the 1000 and 1700 models.
8. System flow (Secondary Loop) must be greater than the boiler’s Primary Loop flow.
9. Installations must comply with all local codes.
10. In Massachusetts, a vacuum relief valve must be installed on the cold water line per 248 CMR.

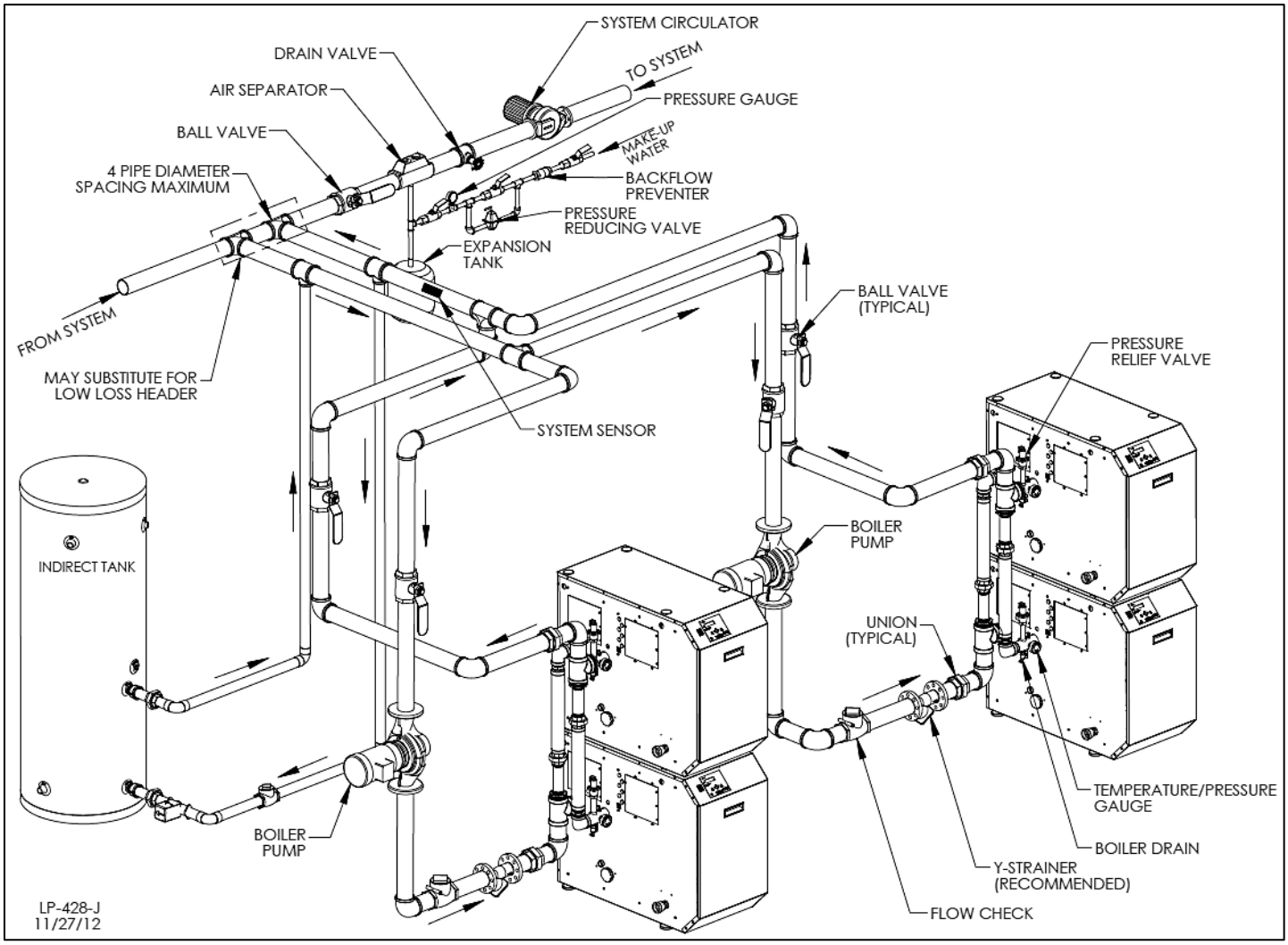

Figure 8 – Cascade Multiple Boilers – Indirect Priority on One

FIGURE NOTES:

1. This drawing is meant to demonstrate system piping concept only.
2. A mixing valve is recommended if the DHW temperature is set above the factory setting of 119°F.
3. Install a minimum of 12 diameters of straight pipe upstream of all circulators.
4. Install a minimum of 6 diameters of straight pipe up and downstream of all closely spaced tees.
5. Piping shown is Primary/Secondary.
6. The minimum pipe size for connecting an HTP indirect fired water heater is 1”.
7. The minimum pipe size for connecting a Mod Con boiler is 3” minimum for both the 1000 and 1700 models. Reference Multiple Boiler Manifold Piping chart, when installing multiple boilers.
8. System flow (Secondary Loop) must be greater than the boiler’s Primary Loop flow.
9. Installations must comply with all local codes.
10. In Massachusetts, a vacuum relief valve must be installed on the cold water line per 248 CMR.
11. System sensor must be placed as shown in drawing.

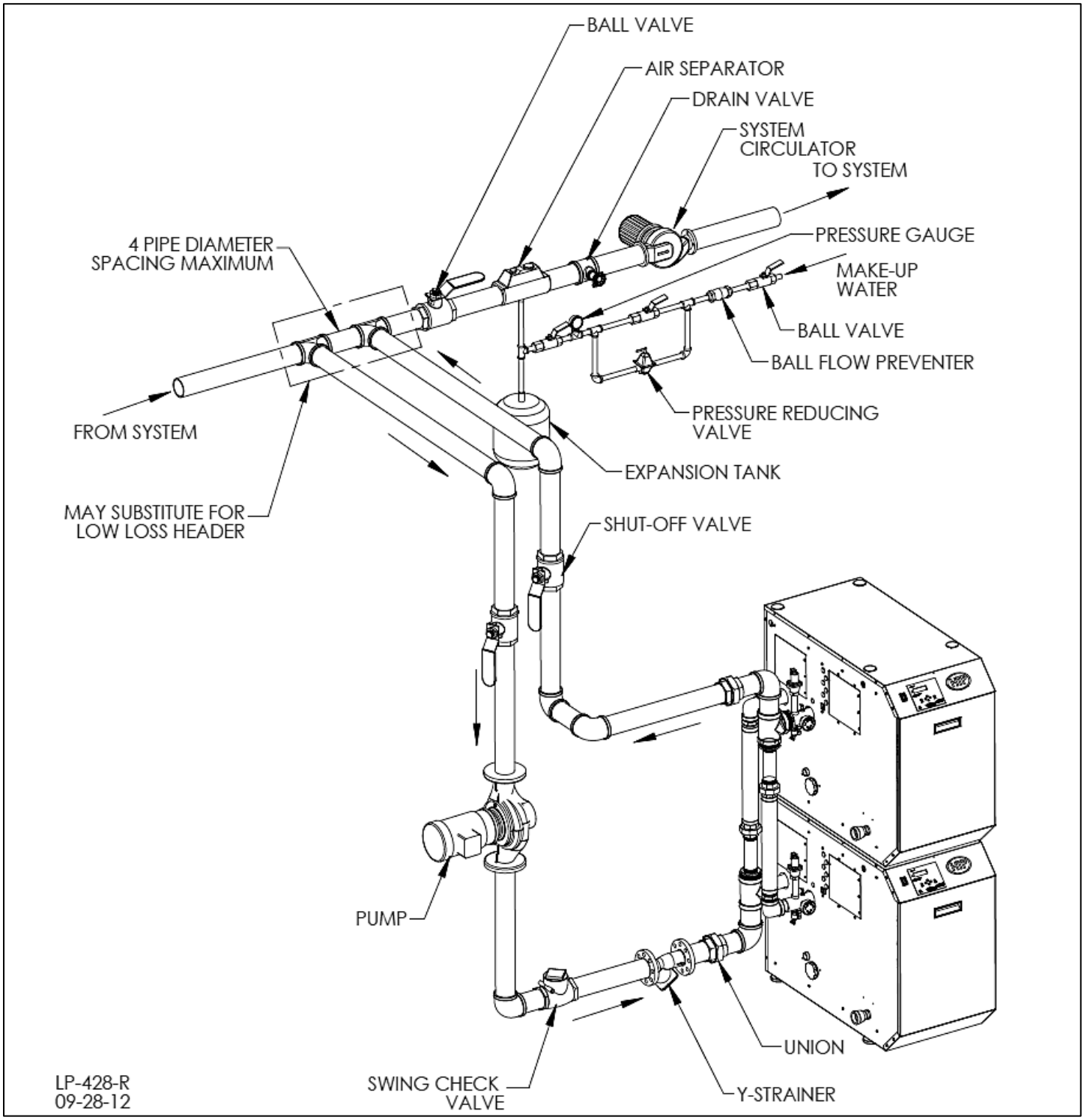

Figure 9 – Single Boiler Space Heating

FIGURE NOTES:

1. This drawing is meant to demonstrate system piping concept only.
2. Install a minimum of 12 diameters of straight pipe upstream of all circulators.
3. Install a minimum of 6 diameters of straight pipe up and downstream of all closely spaced tees.
4. Piping shown is Primary/Secondary.
5. The minimum pipe size for connecting a Mod Con boiler is 3” minimum for both the 1000 and 1700 models.
6. System flow (Secondary Loop) must be greater than the boiler’s Primary Loop flow.
7. Installations must comply with all local codes.

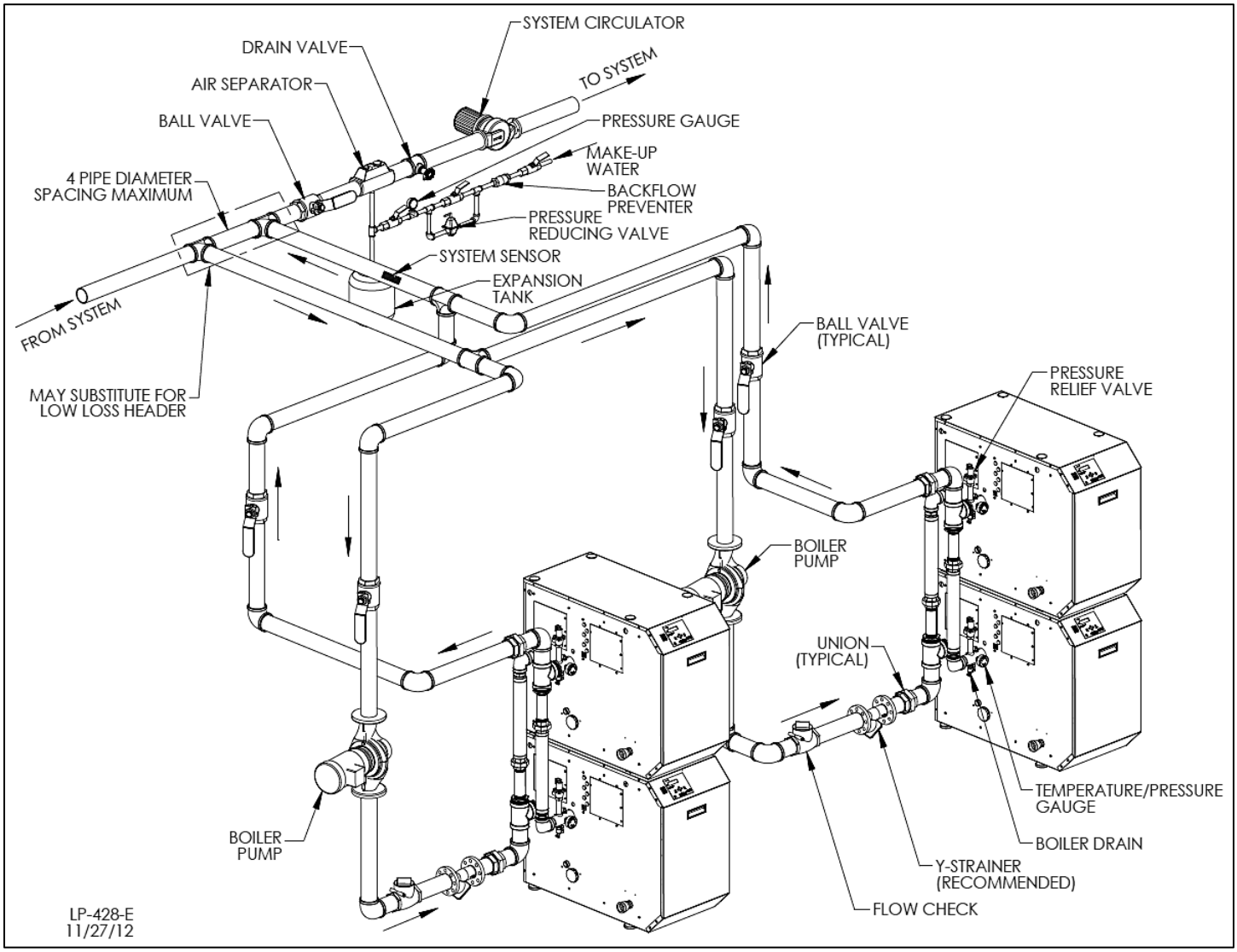

Figure 10 – Cascaded Boilers – Space Heating

FIGURE NOTES:

1. This drawing is meant to demonstrate system piping concept only.
2. Install a minimum of 12 diameters of straight pipe upstream of all circulators.
3. Install a minimum of 6 diameters of straight pipe up and downstream of all closely spaced tees.
4. Piping shown is Primary/Secondary.
5. The minimum pipe size for connecting a Mod Con boiler is 3” minimum for both the 1000 and 1700 models. Reference Multiple Boiler Manifold Piping chart, when installing multiple boilers.
6. System flow (Secondary Loop) must be greater than the boiler’s Primary Loop flow.
7. Installations must comply with all local codes.
8. System sensor must be placed as shown in drawing.

PART 5 – VENTING, COMBUSTION AIR AND CONDENSATE REMOVAL

⚠ DANGER

The boiler must be vented as detailed in this Venting Section. Ensure exhaust vent and intake piping complies with these instructions regarding vent system. Inspect finished exhaust vent and intake piping thoroughly to ensure all joints are well secured, airtight, and comply with all applicable code requirements, as well as with the instructions provided in this manual. Failure to properly install the vent system will result in property damage, severe personal injury, or death.

A. GENERAL

⚠ DANGER

This boiler is certified as a "Category IV" appliance, and requires a special venting system. The vent system will operate with a positive pressure in the pipe. Exhaust gases must be piped directly outdoors using the vent materials and rules outlined in these instructions. Do not connect vent connectors serving appliances vented by natural draft into any portion of mechanical draft systems operating under positive pressure. Follow the venting instructions below carefully. Failure to do so will result in substantial property damage, severe personal injury, or death.

1. Installation should be made in accordance with the regulations of the Authority Having Jurisdiction, local code authorities, and utility companies which pertain to this type of water heating equipment.

2. Install the venting system in accordance with these instructions and with the National Fuel Gas Code, ANSI Z223.1/NFPA 54, CAN/CGA B149, and/or applicable provisions of local building codes.

3. This boiler must be vented with materials, components, and systems listed and approved for Category IV boilers.

⚠ DANGER

Exhaust vent and intake pipes are to be piped separately. This boiler cannot share a common exhaust or intake with multiple appliances. Failure to follow this instruction will result in substantial property damage, severe personal injury, or death.

NOTE: To avoid contamination often contained in indoor air, it is best to pipe all intake combustion air directly to the outdoors.

NOTE: If exhaust vent pipe system passes through an unheated space, such as an alcove or attic, the space must be heated or the pipe must be insulated. The insulation must have an R value sufficient to prevent freezing of the condensate.

⚠ DANGER

Failure to follow all instructions can result in flue gas spillage and carbon monoxide emissions, causing severe personal injury or death.

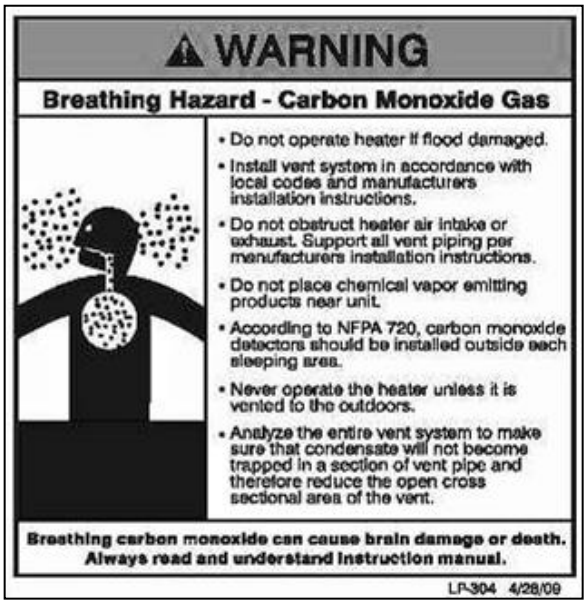

⚠ WARNING

Improper seating of vent pipe gaskets can cause eventual gasket failure and exhaust gas leakage. Ensure the exhaust vent pipe is properly beveled and seated before insertion into the flue adapter. Failure to do so could result in property damage, severe personal injury, or death.

⚠ DANGER

Due to the extreme flammability of most glues, cements, solvents, and primers used to join plastic exhaust vent and intake pipes, explosive solvent vapors must be cleared from all vent piping before start-up. Avoid using excess cement or primer, as this may pool in the vent pipes. Vent assemblies should be allowed to cure for a period of at least 8 hours before powering a connected appliance. Failure to follow these instructions will result in substantial property damage, severe personal injury, or death. It is the installers' responsibility to understand the hazards associated with explosive solvents and take the necessary precautions to avoid these risks.

B. APPROVED MATERIALS FOR EXHAUST VENT AND INTAKE PIPE

⚠ DANGER

The following materials are approved for use as vent pipe for this boiler. Failure to use approved materials could result in substantial property damage, severe personal injury, or death.

APPROVED EXHAUST VENT AND INTAKE PIPE MATERIAL			
Item	**Material**	**Standards for Installation in:**	
		United States	**Canada**
Exhaust vent or Intake pipe and fittings	PVC schedule 40/80	ANSI/ASTM D1785	PP, CPVC, and PVC venting must be ULC-S636 Certified. IPEX is an approved manufacturer in Canada, supplying vent material listed to ULC-S636.
	PVC-DWV*	ANSI/ASTM D2665*	
	CPVC schedule 40/80	ANSI/ASTM F441	
	Polypropylene	ULCS636	
	Stainless Steel AL29-4C	Certified for Category IV and direct vent appliance venting	Certified for Category IV and direct vent appliance venting
Pipe cement/primer	PVC	ANSI/ASTM D2564	IPEX System 636 Cements & Primers
	CPVC	ANSI/ASTM F493	

Table 5

⚠ DANGER

- The exhaust and intake components installed with this boiler must be used for near boiler piping BEFORE transitioning to the approved materials listed above. DO NOT REMOVE these installed components. Doing so WILL VOID boiler warranty.
- PVC/CPVC pipe and fittings of the same diameter are considered interchangeable.
- Do NOT use Foam Core Pipe in any portion of the exhaust piping from this boiler.
- DO NOT connect PVC/CPVC to PP without an approved vent connector.
- When installing AL29-4C vent piping, install a PVC-to-stainless adapter at the boiler vent connection, and at the termination when using an HTP PVC termination kit. DO NOT mix AL-29-4C piping from different manufacturers unless using adapters specifically designed for the purpose by the manufacturer.
- *PVC-DWV for air intake applications ONLY.

Failure to follow these directions will result in substantial property damage, severe personal injury, or death.

⚠ WARNING

DO NOT mix components from different venting systems without proper adapters. The vent system could fail, causing leakage of flue products into the living space. Use only the approved pipe and fitting materials, primer and cement, and adapters specifically designed for the material used, as listed in Table 5. Failure to do so could result in property damage, severe personal injury, or death.

⚠ WARNING

Exhaust vent adaptors are not designed as load-bearing devices, and must not be used to support exhaust vent piping. All vent pipes must be glued, properly supported, and the exhaust must be pitched a minimum of ¼" per foot back to the boiler to allow drainage of condensate. Failure to properly support vent piping and follow the information in this statement could result in product damage, severe personal injury, or death.

⚠ WARNING

For closet and alcove installations: CPVC, polypropylene, or stainless steel venting material MUST BE USED. Failure to follow this statement could result in product damage, severe personal injury, or death.

NOTE: The use of double-wall vent or insulated material for the combustion air inlet pipe is recommended in cold climates to prevent the condensation of airborne moisture in the incoming combustion air.

CAUTION

High heat sources (sources generating heat 100°F / 37°C or greater, such as stove pipes, space heaters, etc.) may damage plastic components of the boiler as well as plastic vent pipe materials. Such damages ARE NOT covered by warranty. It is recommended to keep a minimum clearance of 8" from high heat sources. Observe heat source manufacturer instructions, as well as local, state, provincial, and national codes, laws, regulations and ordinances when installing this boiler and related components near high heat sources.

D. REQUIREMENTS FOR INSTALLATION IN CANADA

1. Installations must be made with a vent pipe system certified to ULC-S636. IPEX is an approved vent manufacturer in Canada supplying vent material listed to ULC-S636. Additionally you may use AL29-4C stainless steel venting to comply with Canadian requirements.

2. The first three (3) feet of vent pipe from the boiler flue outlet must be readily accessible for visual inspection.

3. The components of the certified vent system must not be interchanged with other vent systems or unlisted pipe / fittings.

Cellular foam core piping may be used on air inlet piping **only**.

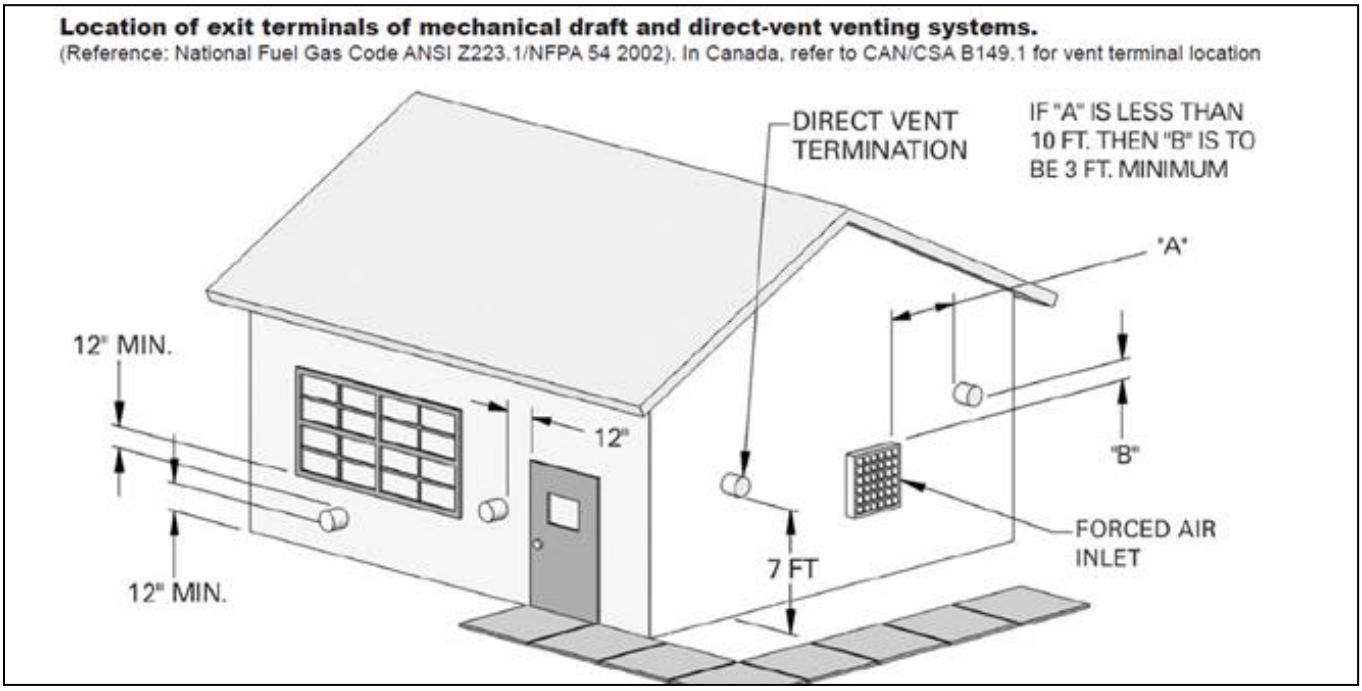

Figure 11

E. EXHAUST VENT AND INTAKE PIPE LOCATION

⚠ WARNING

You must insert the provided exhaust and intake screen at your vent termination to prevent blockage caused by debris or birds.

NOTE: SEE ADDITIONAL REQUIREMENTS FOR MASSACHUSETTS IN THE BACK OF THIS MANUAL.

1. Determine exhaust vent location:

- Total length of vent may not exceed the limits specified in the Venting Section, Part 6.
- The vent piping for this boiler is approved for zero clearance to combustible construction.
- See Venting Details within this section of clearances for location of exit terminals of direct-vent venting systems.
- Avoid terminating exhaust vents near shrubs, air conditioners or other objects that will obstruct the exhaust stream.
- The flue products coming from the exhaust vent will create a large plume when the boiler is in operation. Avoid venting in areas that will affect neighboring buildings or be considered objectionable.
- The boiler vent system shall terminate at least 3 feet (0.9 m) above any forced air intake located within 10 ft (3 m). **NOTE:** This does not apply to the combustion air intake of a direct-vent appliance.
- Provide a minimum of 1 foot distance from any door, operable window, or gravity intake into any building.
- Provide a minimum of 1 foot clearance from the bottom of the exhaust above the expected snow accumulation level. Snow removal may be necessary to maintain clearance.
- Provide 4 feet horizontal clearance from electrical meters, gas meters, gas regulators, relief equipment, exhaust fans and inlets. In no case shall the exit terminal be above or below the aforementioned equipment unless the 4 foot horizontal distance is maintained.
- Do not locate the boiler exhaust over public walkways where condensate could drip and/or freeze and create a nuisance or hazard.
- When adjacent to a public walkway, locate exit terminals at least 7 feet above grade.
- To prevent icicles from forming, do not locate the exhaust directly under roof overhangs.
- Provide 6 feet of clearance from the inside corner of vertical walls, chimneys, etc., as well as horizontal corners created by roof overhangs.

NOTE: In Canada, follow CAN/CGA B149.1-M95 where natural gas fired appliances are used, and CAN/CGA B149.2-M95 where propane fired appliances are used.

2. Determine intake pipe location:

- Provide 1 foot of clearance from the bottom of the intake pipe and the level of maximum snow accumulation. Snow removal may be necessary to maintain clearances.
- Do not locate the intake pipe in a parking area where machinery may damage the vent.
- Follow required minimum clearances located in Figure 11.

NOTE: Due to potential moisture build-up, sidewall venting may not be the preferred venting option. To save time and cost, carefully consider venting installation and location.

⚠ WARNING

The building owner is responsible for keeping the exhaust and intake terminations free of snow, ice, or other potential blockages, as well as scheduling routine maintenance. Failure to keep the vent piping terminations clear and properly maintain the boiler could result in property damage, severe personal injury, or death.

⚠ WARNING

For each floor containing bedroom(s), a carbon monoxide detector and alarm shall be placed in the living area outside the bedrooms, as well as in the room that houses the boiler. Detectors and alarms shall comply with NFPA 720 (latest edition). Failure to comply with requirements for detectors and alarms could result in property damage, severe personal injury, or death.

3. Determine location of condensate piping:
This boiler is a high efficiency appliance, and therefore produces condensate: a by-product of the combustion process. A condensate collection system with an internal float switch monitors the condensate level to prevent it from backing up into the combustion system. There is a ¾" sweat connection provided to connect the outlet of the collection system to a drain or condensate pump (See Table 6 for approved condensate piping material).

APPROVED PLASTIC CONDENSATE PIPING MATERIAL		
MATERIAL	**STANDARDS FOR INSTALLATION IN:**	
	UNITED STATES	**CANADA**
PVC SCHEDULE 40 / 80	ANSI/ASTM D1785	ULC S636

Table 6 – Approved Plastic Condensate Piping Material

NOTE: Check with your local gas company to determine if combustion condensate disposal is permitted in your area. In the state of Massachusetts, condensate must be neutralized before entering a drain.

4. Condensate neutralization
Condensate from the boiler is slightly acidic with a pH of 3.2 - 4.5. To avoid long term damage to the drainage system and to meet local code requirements, HTP recommends neutralizing the condensate with a Condensate Neutralizer Kit (Part # 7350P-611). The neutralizer kit connects to the drain system and contains marble chips that neutralize the pH level of the water vapor. The neutralizer kit should be checked annually and the marble chips replenished if necessary. When replacing the marble chips, take care to ensure chips are no smaller than ½" to avoid blockage in condensate piping (refer to Figure 12 for piping of the condensate neutralizer.)

CAUTION

It is very important that the condensate piping be no smaller than ¾". You must use a tee at the condensate connection with a branch vertically up and open to the atmosphere, so as not to cause a vacuum that could obstruct the flow of condensate from the boiler. To prevent sagging and maintain pitch, condensate piping should be supported with pipe supports.

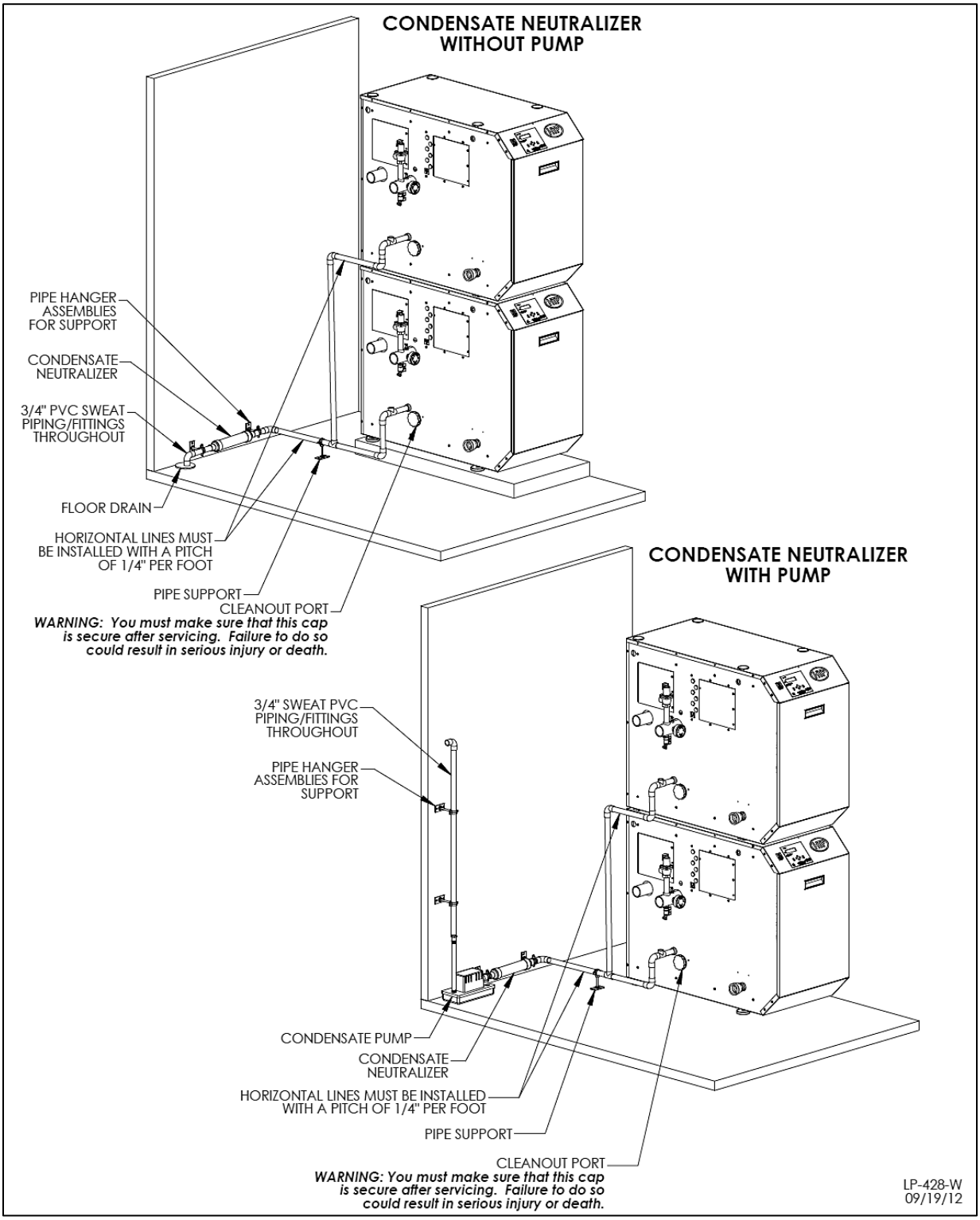

Figure 12 – Condensate Piping NOTE: Blow water into the condensate collector to remove any foreign matter that may block the line.

NOTES:

1. Condensate line must be pitched at least 1/4" per foot to properly drain. If this cannot be done, or a very long length of condensate hose is used, you must increase the condensate line to a minimum of 1" ID and place a tee in the line after the condensate neutralizer to properly reduce vacuum lock in the drain line.

2. Plastic pipe should be the only material used for the condensate line. Steel, brass, copper, or other materials will be subject to corrosion or deterioration.

3. NEVER install condensate lines outside. It is very important that the condensate line is not exposed to freezing temperatures or any type of blockage. Damages due to frozen or blocked condensate lines ARE NOT covered by warranty.

4. Support of the condensate line may be necessary to avoid blockage of the condensate flow.

CAUTION

When installing a condensate pump, select one approved for use with condensing boilers and furnaces. The pump should have an overflow switch to prevent property damage from condensate spillage.

CAUTION

The condensate line must remain unobstructed, allowing free flow of condensate. If condensate freezes in the line, or if line is obstructed in any other manner, condensate can exit from boiler tee, resulting in potential water damage to property.

F. EXHAUST VENT AND INTAKE PIPE SIZING

MODEL	AIR INTAKE		EXHAUST VENT		MAX. TOTAL EQUIVALENT VENT LENGTH (INTAKE AND EXHAUST)	INPUT DE-RATE PER 25' OF VENT
	AIR INTAKE DIAMETER	AIR INTAKE MIN. LENGTH	VENT DIAMETER	VENT MIN. LENGTH		
MODCON1000	6"	16'	6"	16'	150'	2%
MODCON1700	8"	16'	8"	16'	150'	2%

Table 7 – Exhaust Vent and Intake Pipe Sizing

1. The equivalent length of friction loss in elbows, tees, and other fittings are listed in Table 8.

FRICTION LOSS EQUIVALENT FOR STAINLESS OR PLASTIC PIPING AND FITTINGS		
FITTING DESCRIPTION	**6"**	**8"**
90° elbow short radius	3'	3'
90° elbow long radius	2'	2'
45° elbow	1'	1'
Coupling	0'	0'
Tee (intake only)	0'	0'
V Series Vent Kit	1'	1'
AL20 4C Vent Terminal	1'	1'
Pipe (All Materials)	1'	1'

Table 8 – Friction Loss in Equivalent Feet - *Friction loss for long radius elbow is 1' less.

2. For example: If the exhaust vent has two short 90° elbows and 10 feet of PVC pipe we will calculate: Exhaust Vent Equivalent Length = (2x3) + 10 = 16 feet.

Further, if the intake pipe has two short 90° elbows, one 45° elbow, and 10 feet of PVC pipe, the following calculation applies: Intake Pipe Equivalent Length = (2x3) + 1 + 10 = 17 feet.

3. The exhaust vent and intake pipe are intended to penetrate the same wall or roof of the building.

4. The minimum total equivalent length is 16 feet.

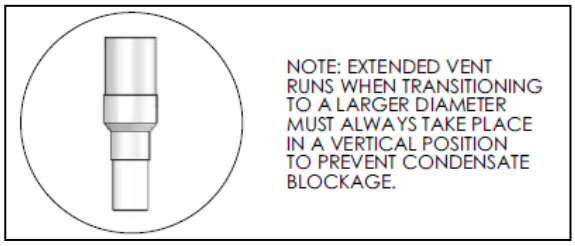

Figure 13

G. EXHAUST VENT AND INTAKE PIPE INSTALLATION

⚠ WARNING

All joints of positive pressure vent systems must be sealed completely to prevent leakage of flue products into living space.

1. Use only solid PVC or CPVC pipe, or a Polypropylene vent system, approved for use with Category IV boilers.

FOAM CORE PIPING IS NOT APPROVED FOR EXHAUST APPLICATIONS. Foam core piping may be used on air inlet piping **only**.

2. Remove all burrs and debris from joints and fittings.

3. When using PVC or CPVC pipe, all joints must be properly cleaned, primed, and cemented. Use only cement and primer approved for use with the pipe material. Cement must conform to ASTM D2564 for PVC and ASTM F493 for CPVC pipe. **NOTE: DO NOT CEMENT POLYPROPYLENE PIPE.**

4. Ensure the vent is located where it will not be exposed to prevailing winds.

5. In all roof venting applications, exhaust discharge must point away from the pitch of the roof.

6. To prevent water leakage, install adequate roof flashing where the pipe enters the roof.

7. Do not locate vent over public walkways, driveways, or parking lots. Condensate could drip and freeze, resulting in a slip hazard or damage to vehicles and machinery.

8. Due to potential moisture build-up, sidewall venting may not be the preferred venting option. To save time and cost, carefully consider venting installation and location.

9. Horizontal lengths of exhaust vent must slope back towards the appliance not less than ¼" per foot to allow condensate to drain from the vent pipe.

10. The exhaust vent must terminate where vapors cannot make accidental contact with people or pets, or damage shrubs or plants.

11. In vacant chimney applications, install and seal a rain cap over existing chimney openings.

12. All piping must be fully supported. Use pipe hangers at a minimum of 4 foot intervals to prevent sagging of the pipe where condensate may form.

13. Do not use the appliance to support any piping.

14. A screened straight coupling is provided with the appliance for use as an outside exhaust termination.

15. A screened inlet air tee is provided with the appliance to be used as an outside intake termination.

H. BOILER REMOVAL FROM A COMMON VENT SYSTEM

When removing an existing boiler, the following steps must be followed.

1. Seal any unused openings in the common venting system.

2. Visually inspect the venting system for proper size and horizontal pitch to determine if there is blockage, leakage, corrosion or other deficiencies that could cause an unsafe condition.

3. If practical, close all building doors, windows and all doors between the common venting system and other spaces in the building. Turn on clothes dryers and any appliances not connected to the common venting system. Turn on any exhaust fans, such as range hoods and bathroom exhausts, at maximum speed. Do not operate a summer exhaust fan. Close all fireplace dampers.

4. Place in operation the appliance being inspected. Follow the lighting instructions. Adjust the thermostat so the appliance will operate continuously.

5. Test for spillage at the draft hood relief opening after 5 minutes of main burner operation. Use the flame of a match or candle or smoke from a cigarette.

6. After it has been determined that each appliance remaining connected to common venting system properly vents when tested as outlined, return doors, windows, exhaust fans, fireplace dampers and any other gas burning appliance to their previous condition of use.

7. Any improper operation of the common venting system should be corrected so the installation conforms to the National Fuel Gas Code, ANSI Z223.1. When resizing any portion of the common venting system, the common venting system should be resized to approach the minimum size as determined using the appropriate tables in Appendix G in the National Fuel Gas Code, ANSI Z 223.1.

NOTE: For Canadian Installations, it is required that Non Metallic Vent Installations conform to ULC S636. Where plastic venting is not allowed, HTP recommends AL294C Stainless Steel Venting be used for Exhaust venting installations and “B” vent for intake air.

I. SIDEWALL VENTING DIAGRAMS

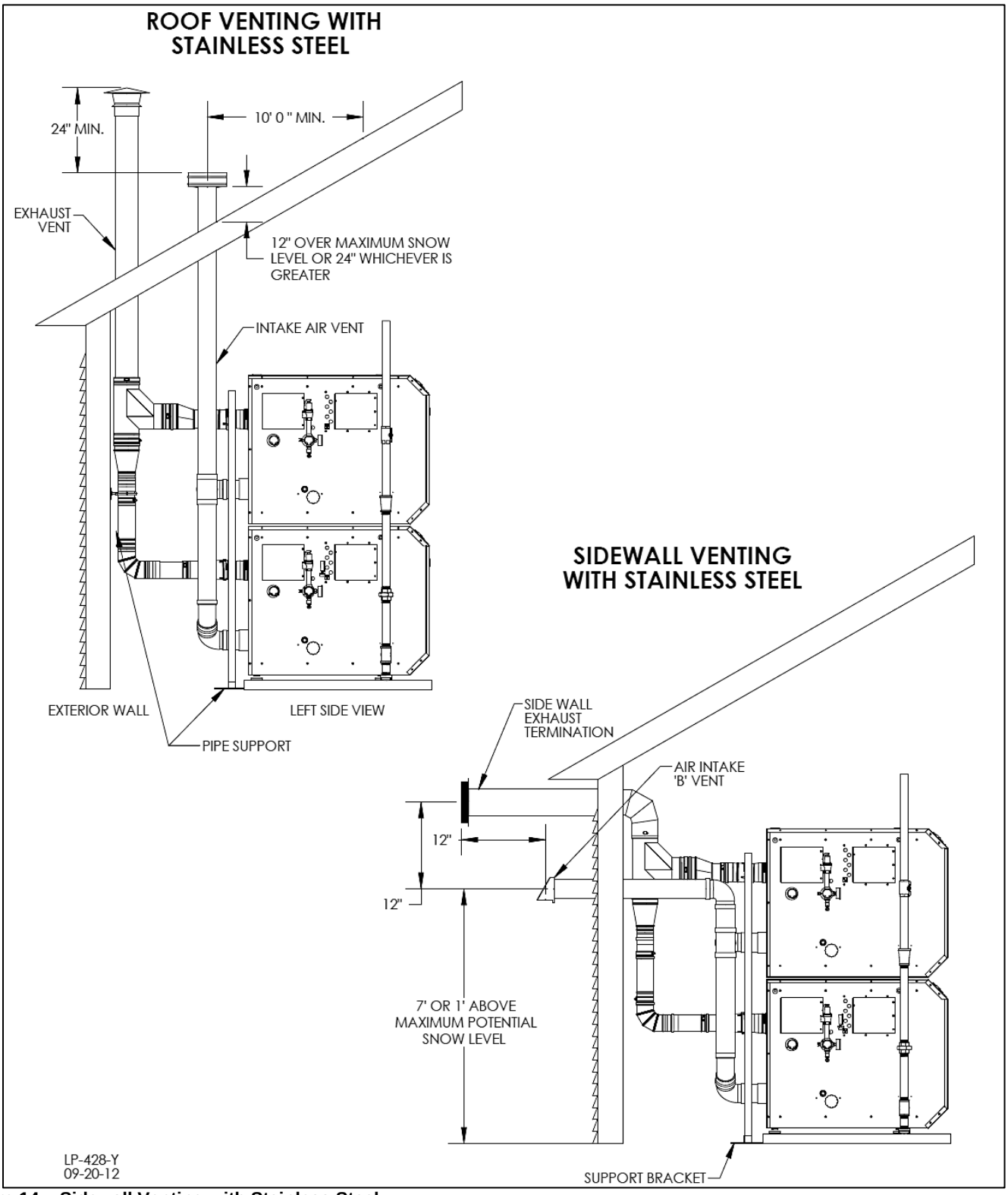

Figure 14 – Sidewall Venting with Stainless Steel

⚠ WARNING

All vent pipes must be glued, properly supported, and the exhaust must be pitched a minimum of ¼" per foot back to the boiler to allow drainage of condensate. Exhaust connection insertion depth should be a minimum of 2 ½" for 1000 models and 3" for 1700 models. When placing support brackets on vent piping, the first bracket must be within 1' of the appliance and the balance at 4' intervals on the vent pipe. Boiler venting must be readily accessible for visual inspection for the first three feet from the boiler.

J. VERTICAL VENTING DIAGRAMS

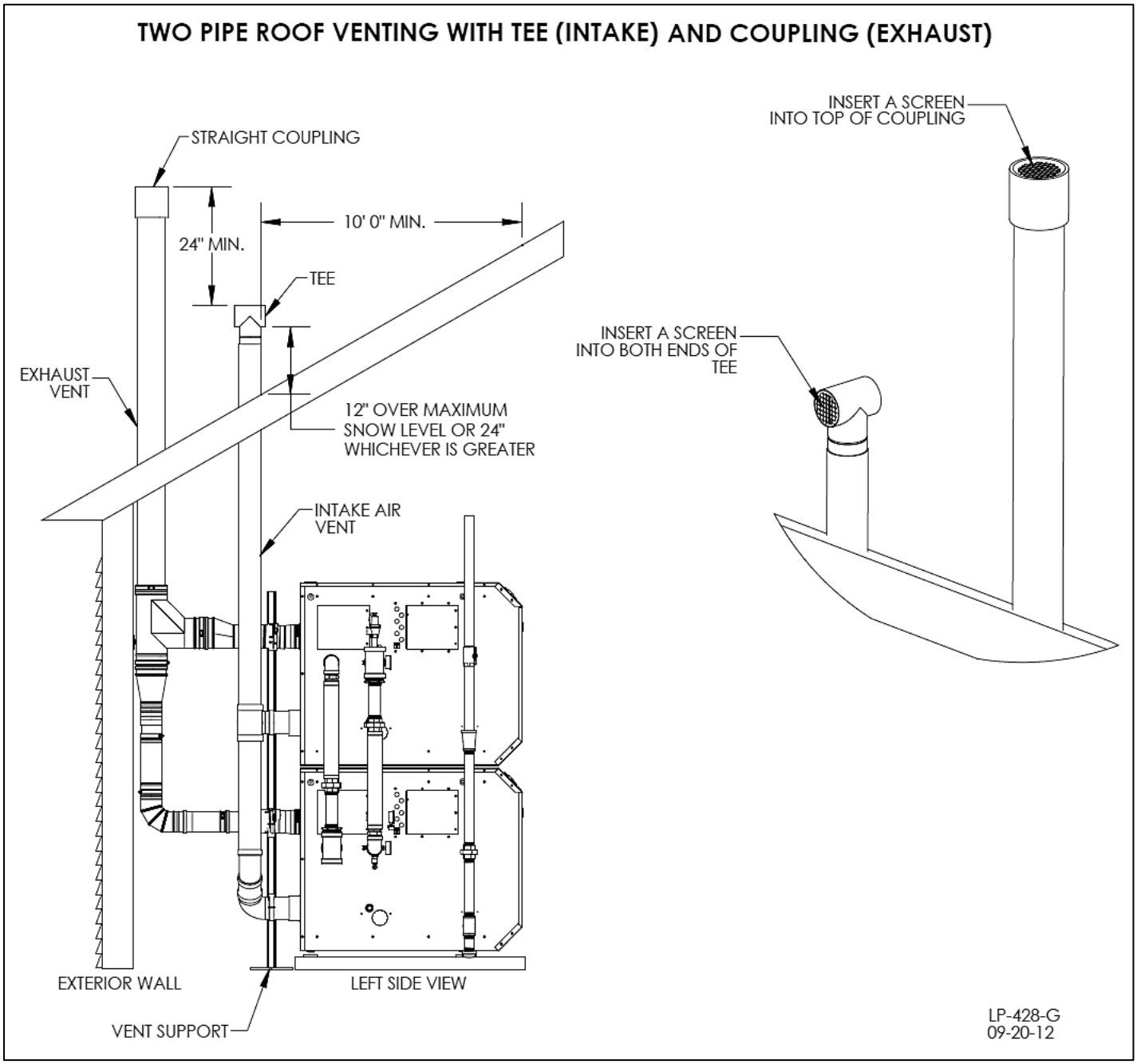

Figure 15 – Two Pipe Roof Venting with Tee and Coupling

⚠ WARNING

All vent pipes must be glued, properly supported, and the exhaust must be pitched a minimum of ¼" per foot back to the boiler to allow drainage of condensate. Exhaust connection insertion depth should be a minimum of 2 ½" for 1000 models and 3" for 1700 models. When placing support brackets on vent piping, the first bracket must be within 1' of the appliance and the balance at 4' intervals on the vent pipe. Boiler venting must be readily accessible for visual inspection for the first three feet from the boiler.

⚠ WARNING

Take extra precaution to adequately support the weight of vent pipes terminating through the roof. Failure to properly support roof terminated vent piping could result in property damage, serious personal injury, or death due to flue gas leakage.

K. ROOM AIR, INDOOR COMBUSTION, AND VENTILATION AIR INSTALLATION REQUIREMENTS

When using an indoor combustion air installation, the mechanical room MUST be provided with properly sized openings, and/or be of sufficient volume to assure adequate combustion air and proper ventilation for all gas fired appliances in the mechanical room to assure adequate combustion air and proper ventilation. The requirements shown here are for the boiler only. Additional gas fired appliances in the mechanical room will require an increase in the net free area and/or volume to supply adequate combustion air for all appliances. This must be done in accordance with the National Fuel Gas Code, NFPA 54 / ANSI Z223.1.

This boiler can be vented using mechanical room air only for combustion. No combustion air openings are needed when the boiler is installed in a space with a volume NO LESS than 50 cubic feet per 1,000 BTU/hr of all installed gas fired appliances and the building MUST NOT BE of “Tight Construction”.

TIGHT CONSTRUCTION: A building with less than .4 ACH (air changes per hour). For buildings of “Tight Construction”, provide air openings into the building from the outside.

Indoor and outdoor combustion air may be combined by applying a ratio of available volume to required volume times the required outdoor air opening(s) size(s). This must be done in accordance with the National Fuel Gas Code, NFPA 54 / ANSI Z223.1.

1. If air is taken directly from outside the building with no duct, provide two permanent openings to the mechanical room each with a net free area of one square inch per 4000 BTU/hr input. See Figure 16.

2. If combustion and ventilation air is taken from the outdoors using a duct to deliver the air to the mechanical room, each of the two openings should be sized based on a minimum free area of one square inch per 2000 BTU/hr input. See Figure 17.

3. If air is taken from another interior space combined with the mechanical room:
   a. Two spaces on same story: Each of the two openings specified should have a net free area of one square inch for each 1000 BTU/hr input, but not less than 100 square inches.
   b. Two spaces on different stories: One or more openings should have a net free area of two square inches per 1000 BTU/hr.

See Figure 18 for reference.

4. If a single combustion air opening is provided to bring combustion air in directly from the outdoors, the opening must be sized based on a minimum free area of one square inch per 3000 BTU/hr. This opening must be located within 12” of the top of the enclosure. See Figure 19.

Combustion air requirements are based on the latest edition of the National Fuel Gas Code, NFPA 54 / ANSI Z223.1, CGA Standard CAN/CSA B149.1 in Canada. Check all local code requirements for combustion air.

All dimensions based on net free area in square inches. Metal louvers or screens reduce the free area of a combustion air opening a minimum of approximately 25%. Check with louver manufacturers for exact net free area of louvers.

Where two openings are provided, one must be within 12” of the ceiling, and one must be within 12”of the floor of the mechanical room. Each opening must have a net free area as specified in Table 9. Single openings shall commence within 12” of the ceiling. The minimum dimension of air openings should not be less than 3”.

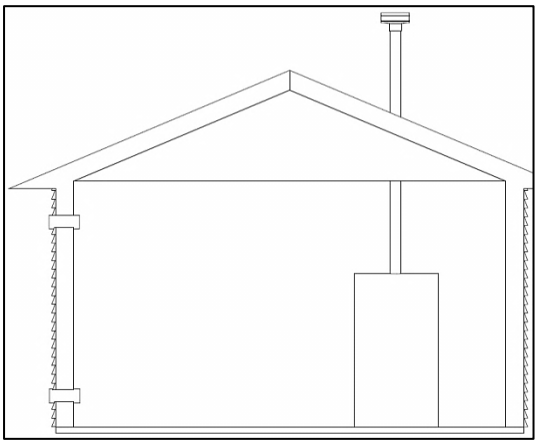

Figure 16 – Combustion Air From Outdoors

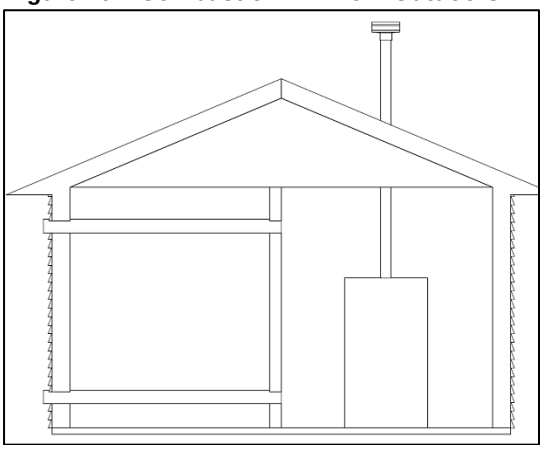

Figure 17 – Combustion Air Through Ductwork

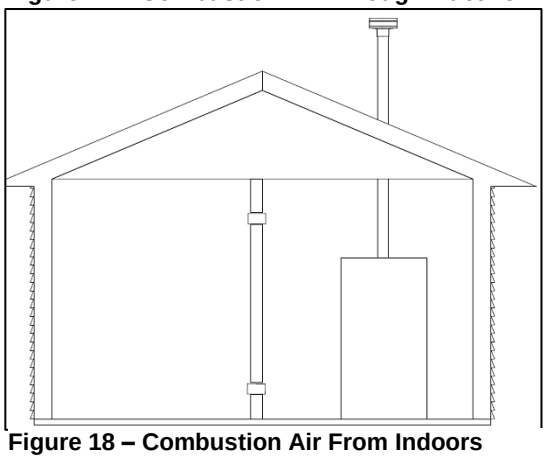

Figure 18 – Combustion Air From Indoors

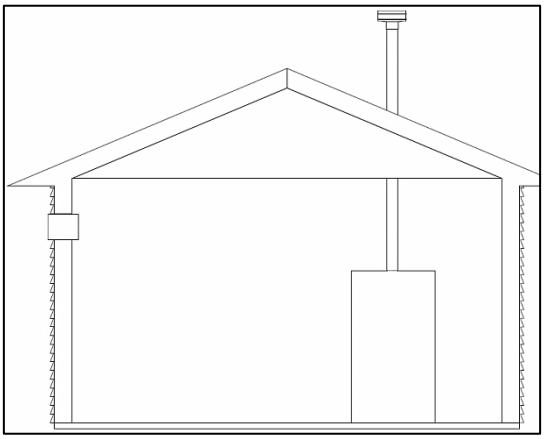

Figure 19 – Combustion Air From Outdoors – Single Opening

⚠ CAUTION

Under no circumstances should the mechanical room ever be under negative pressure. Particular care should be taken where exhaust fans, attic fans, clothes dryers, compressors, air handling units, etc., may take away air from the unit. Failure to follow these instructions could result in property damage or personal injury.

Combustion air supply must be completely free of any flammable vapors that may ignite, or chemical fumes which may be corrosive to the boiler. See Table 1 for a list of combustion air contaminants. These chemicals, when burned, form acids which quickly attack the stainless steel heat exchanger, headers, flue connectors, and the vent system. The result is improper combustion and premature boiler failure. Such failure IS NOT covered under warranty.

EXHAUST FANS: Any fan or appliance which exhausts air from the mechanical room may deplete the combustion air supply and/or cause a downdraft in the venting system. Spillage of flue products from the venting system into an occupied living space can cause a very hazardous condition that must be corrected immediately.

MINIMUM RECOMMENDED COMBUSTION AIR SUPPLY TO MECHANICAL ROOM								
MODEL	FIGURE 16		FIGURE 17		FIGURE 18			FIGURE 19
	*Outside Air from 2 Openings Directly from Outdoors[1]		*Outside Air from 2 Ducts Delivered from Outdoors[1]		Inside Air from 2 Ducts Delivered from Interior Space[2]			*Outside Air from 1 Opening Directly from Outdoors, in^2 [1]
					Same Story		Different Stories	
	Top Opening, in^2	Bottom Opening, in^2	Top Opening, in^2	Bottom Opening, in^2	Top Opening, in^2	Bottom Opening, in^2	Total Opening, in^2	
MODCON1000	250	250	500	500	1000	1000	2000	335
MODCON1700	425	425	850	850	1700	1700	3400	570

Table 9 – Indoor Combustion Air Sizing

The above requirements are for the boiler only; additional gas fired appliances in the mechanical room will require an increase in the net free area and/or volume to supply adequate combustion air for all appliances.
No combustion air openings are needed when the boiler is installed in a space with a volume NO LESS than 50 cubic feet per 1,000 BTU/hr of all installed gas fired appliances. Buildings MUST NOT be of *"Tight Construction".
[1]Outside air openings shall communicate with the outdoors.
[2]Combined interior space must be 50 cubic feet per 1,000 BTU/hr input. Buildings MUST NOT be of *"Tight Construction".

PART 6 – GAS PIPING

⚠ DANGER

FAILURE TO FOLLOW ALL PRECAUTIONS IN THIS SECTION COULD RESULT IN FIRE, EXPLOSION, OR DEATH!

A. GAS CONNECTION

The gas supply shall have a maximum inlet pressure of less than 14" w.c. (3.5 kPa), and a minimum of 3.5" w.c. (.87 kPa). The entire piping system, gas meter and regulator must be sized properly to prevent pressure drop greater than 0.5" (.12 kPa) as stated in the National Fuel Gas Code. This information is listed on the rating label.

⚠ DANGER

It is very important that you are connected to the type of gas noted on the rating plate. "LP" for liquefied petroleum, propane gas, or "NAT" for natural or city gas. Prior to turning the gas on, all gas connections must be approved by the local gas supplier or utility, in addition to the governing authority.

A gas conversion kit comes with Mod Con 1000 boilers ONLY. Field conversions ARE NOT ALLOWED on the Mod Con 1700. A properly calibrated combustion analyzer must be used to verify proper combustion. Failure to follow all above information could result in property damage, serious injury, or death.

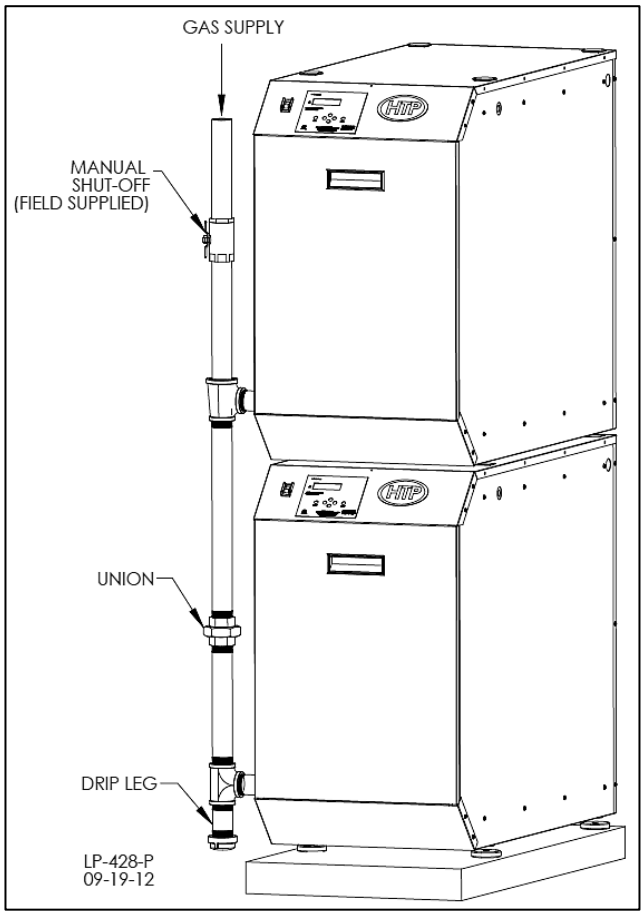

Figure 20 – Gas Connection Detail

⚠ WARNING

Do not attempt to support the weight of gas piping with the boiler or its accessories. The gas valve and blower will not support the weight of the piping. Failure to follow this warning could result in substantial property damage, severe personal injury, or death.

The gas connection on the boiler is 3” for the Mod Con 1000 and 4” for the Mod Con 1700. It is mandatory that this fitting is used for connection to a field fabricated drip leg as shown in the illustration above per the National Fuel Gas Code. You must ensure that the entire gas line to the connection at the boiler is no smaller than the unit supplied connection.

Once all inspections have been performed, the piping must be leak tested. If the leak test requirement is at a higher test pressure than the maximum inlet pressure, you must isolate the boiler from the gas line. To do this, shut the gas off using factory and field-installed gas cocks. Failure to do so may damage the gas valve. In the event the gas valve is exposed to a pressure greater than ½ PSI, 14" w.c. (3.5 kPa), the gas valve must be replaced. Never use an open flame (match, lighter, etc.) to check gas connections.

B. GAS PIPING

1. Run the gas supply line in accordance with all applicable codes.

2. Locate and install manual shutoff valves in accordance with state and local requirements.

3. In Canada, the Manual Shutoff must be identified by the installing contractor.

4. It is important to support gas piping as the unit is not designed to structurally support a large amount of weight.

5. Purge all gas lines thoroughly to avoid start up issues with air in the lines.

6. Sealing compound must be approved for gas connections. Care must be taken when applying compound to prevent blockage or obstruction of gas flow which may affect the operation of the unit.

⚠ WARNING

Failure to apply pipe sealing compound as detailed above could result in substantial property damage, severe personal injury, or death.

CAUTION

CSA / UL listed flexible gas connections can be used when installing the boiler. Flexible gas connections have different capacities and must be sized correctly for the connected boiler firing rates. Consult with the flex line supplier to assure the line size is adequate for the job. Follow local codes for proper installation and service requirements.

⚠ WARNING

Never use an open flame (match or lighter) to check for gas leaks. Use a soapy solution to test connection. Failure to use a soapy solution test or check gas connection for leaks could result in substantial property damage, severe personal injury, or death.

CAUTION

Use a two-wrench method when tightening gas piping near the boiler and its piping connection: One wrench to prevent the boiler gas line connection from turning; the second to tighten the adjacent piping. Failure to support the boiler gas piping connection could damage the boiler beyond repair. Such damage IS NOT covered by warranty.

C. GAS TABLE

Refer to Table 10 to size the supply piping to minimize pressure drop between the meter or regulator and unit. Maximum capacity of pipe in cubic feet of gas per hour for gas pressures of .5 w.c. or less and a pressure drop of .3 inch w.c.

NATURAL GAS SUPPLY PIPING CAPACITY CHART					
Schedule 40 Iron Pipe in Nominal Inch Size (0.6 Specific Gravity Gas; 0.5” WC pressure drop)					
MODEL	**PIPE LENGTH**	**1 UNIT**	**2 UNITS**	**3 UNITS**	**4 UNITS**
Mod Con 1000	100’	2”	3”	3”	4”
	250’	2 ½”	3”	4”	4”
Mod Con 1700	100’	2 ½”	4”	4”	5”
	250’	3”	4”	5”	5”

Table 10 – Gas Supply Piping Size Chart for Mod Con Boilers

D. CHECK INLET GAS PRESSURE

The gas valve is equipped with an inlet gas pressure tap that can be used to measure the gas pressure to the unit. To check gas pressure, perform the steps listed below:

1. **IMPORTANT!** Before you connect to the inlet pressure, shut off the gas and electrical power to unit.

2. Loosen the pressure tap with a small screwdriver. Refer to Figs. 20 and 21 for locations.

3. Each unit is equipped with a needle valve that will accept a 5/16 ID hose to connect to a digital manometer or liquid gauge to measure incoming pressure from 0-35” w.c.

4. Turn on the gas and power up the unit.

5. Put the unit into manual service mode (details on service mode are in the back of this manual). In service mode, monitor pressure to assure it does not drop below 1 inch from its idle reading. If gas pressure is out of range, or pressure drop is excessive, contact the gas utility, gas supplier, qualified installer, or service agency to determine the correct action needed to provide proper gas pressure to the unit. If gas pressure is within normal range, proceed to Step 6.

6. Exit Service mode, then turn power off and shut off the gas supply at the manual gas valve before disconnecting the hose from the gas monitoring device. Tighten the screw on the pressure tap, turn gas on, and check for leaks with a soapy solution. If a leak is present, bubbles will appear on the pipe.

⚠ WARNING

Ensure the pressure tap screw is properly tightened to prevent gas leaks. Failure to do so could cause substantial property damage, severe personal injury, or death.

The gas piping must be sized for the proper flow and length of pipe to avoid pressure drop. The gas meter and regulator must be properly sized for the total gas load. If you experience a pressure drop greater than 1" w.c. (.87 kPa), the meter, regulator or gas line may be undersized or in need of service. You can attach a manometer to the incoming gas drip leg after removing the cap. The gas pressure must remain between 3.5" (.87 kPa) and 14" (3.5 kPa) during stand-by (static) mode and while in operating (dynamic) mode.

If an in-line regulator is used, it must be a minimum of 10 feet from the boiler. It is very important that the gas line is properly purged by the gas supplier or utility. Failure to properly purge the lines, or improper line sizing, will result in ignition failure. This problem is especially noticeable in NEW LP installations and empty tank situations. This situation can also occur when a utility company shuts off service to an area to provide maintenance to their lines. This gas valve must not be replaced with a conventional gas valve under any circumstances.

⚠ WARNING

DO NOT adjust or attempt to measure gas valve outlet pressure. The gas valve is factory-set for the correct outlet pressure and requires no field adjustment. Attempts by the installer to adjust or measure the gas valve outlet pressure could result in damage to the valve and cause substantial property damage, severe personal injury, or death.

E. GAS VALVE

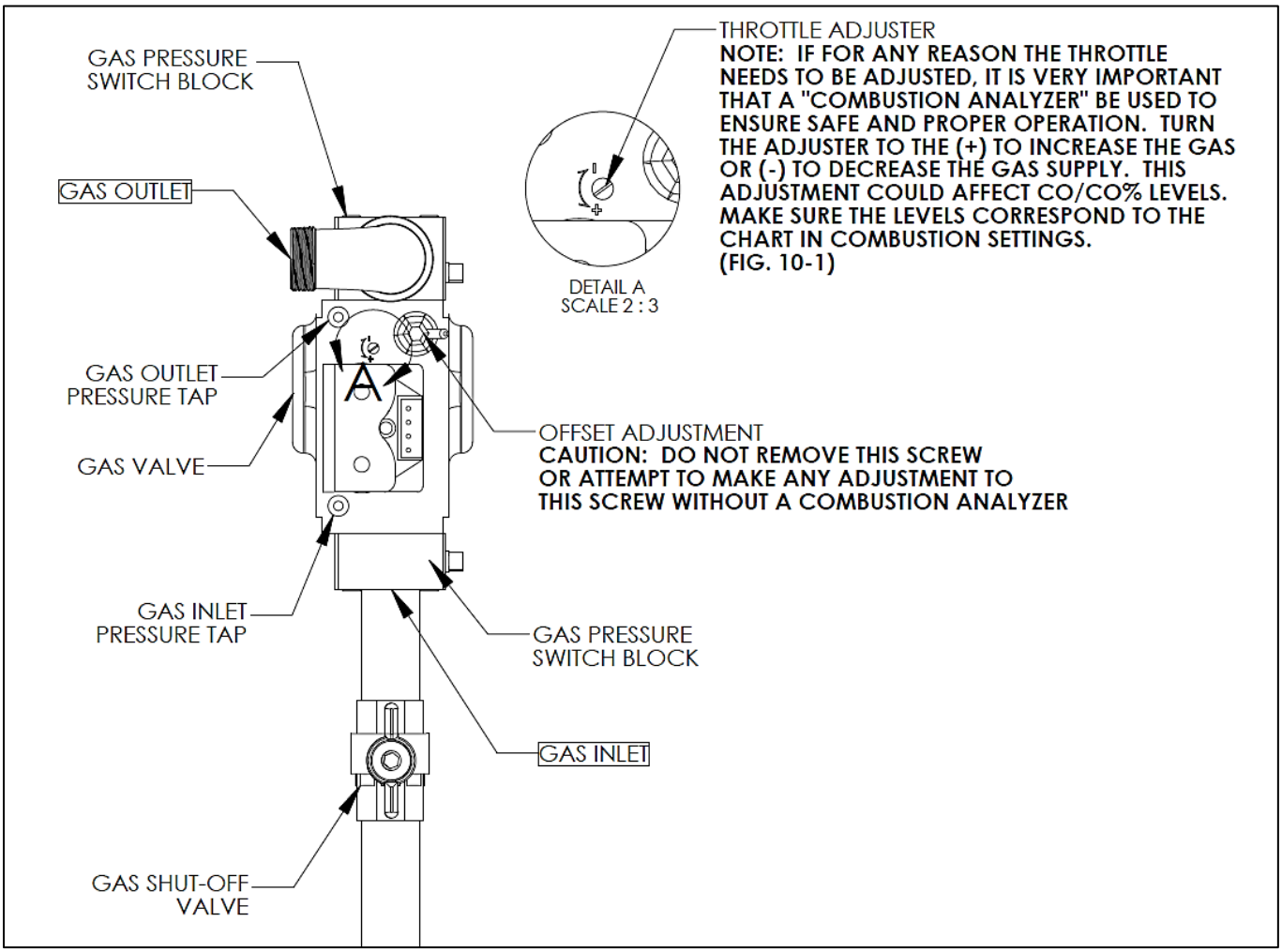

Figure 21 – Mod Con 1000 Gas Valve

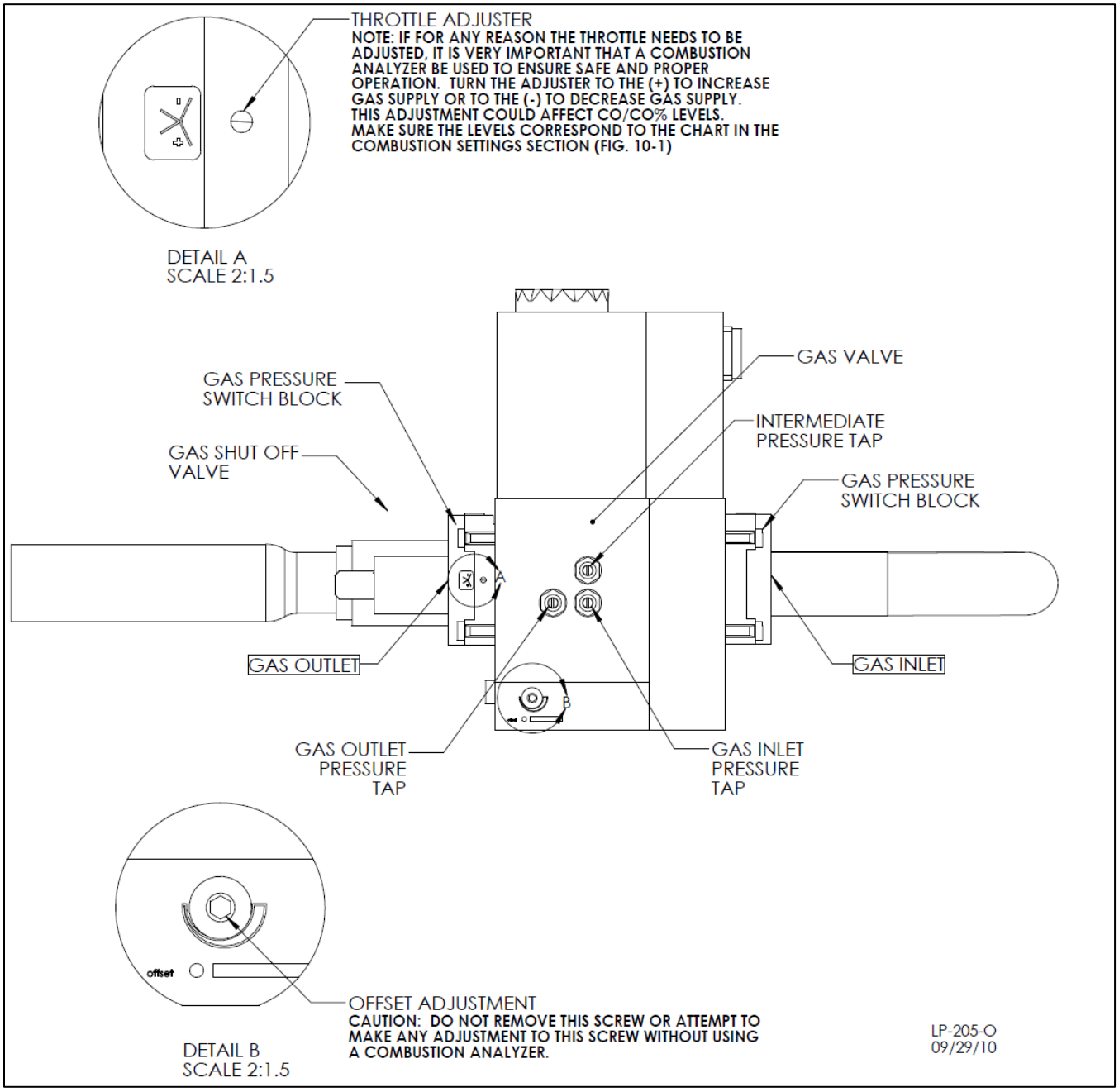

Figure 22 – Mod Con 1700 Gas Valve

⚠ DANGER

Do not do a gas conversion on this boiler without an officially approved conversion kit and instructions supplied by HTP. Failure to use a conversion kit when converting the boiler to fire on Natural or LP gas will result in extremely dangerous burner operation, leading to fire, explosion, severe injury or death.

⚠ WARNING

Strain on the gas valve and fittings may result in vibration, premature component failure and gas leakage, and result in fire, explosion, property damage, severe personal injury, or death.

⚠ WARNING

Adjustments to the throttle screw or offset may only be made by a qualified gas technician using a calibrated combustion analyzer capable of measuring CO_2 and CO. Failure to follow this instruction could result in fire, explosion, property damage, severe personal injury, or death.

PART 7 – FIELD WIRING

⚠ WARNING

To avoid electrical shock, turn off all power to the appliance prior to opening an electrical box within the unit. Ensure the power remains off while any wiring connections are being made. Failure to follow these instructions could result in component or product failure, serious injury, or death. Such product failure IS NOT covered by warranty.

⚠ WARNING

ELECTRICAL SHOCK HAZARD - Turn off electrical power supply at service entrance panel before making any electrical connections. Failure to do so can result in severe personal injury or death.

CAUTION

Wiring must be N.E.C. Class 1. If original wiring supplied with the boiler must be replaced, use only UL Listed TEW 105° C wire or equivalent. Boiler must be electrically grounded as required by National Electrical Code ANSI/NFPA 70 – Latest Edition.

⚠ CAUTION

In order to ease future servicing and maintenance, it is advised to label all wires. Wiring errors can cause improper and dangerous operation. Failure to follow these instructions could result in property damage or personal injury.

A. INSTALLATION MUST COMPLY WITH:

1. National Electrical Code and any other national, state, provincial or local codes or regulations.

2. In Canada, CSA C22.1 Canadian Electrical Code Part 1, and any local codes.

B. FIELD WIRING

All connections made to the boiler in the field are done inside the electrical junction box located on the side of the unit. The electrical junction box is located on the left side of both boilers. Multiple knockout locations are available to route field wires into and out of the electrical junction box. Most of the electrical field connections are made to the bottom boiler. If it is required to connect to the top boiler, it will be clearly marked in this section.

The control system used in the Mod Con 1000 and 1700 series of boilers is capable of directly controlling 3 pumps when configured as a cascade master boiler. Each pump output can provide a maximum of 3 amps at 120 volts. This output is sufficient to operate the coil of a motor starter correctly sized for the pump or pumps used in the system design.

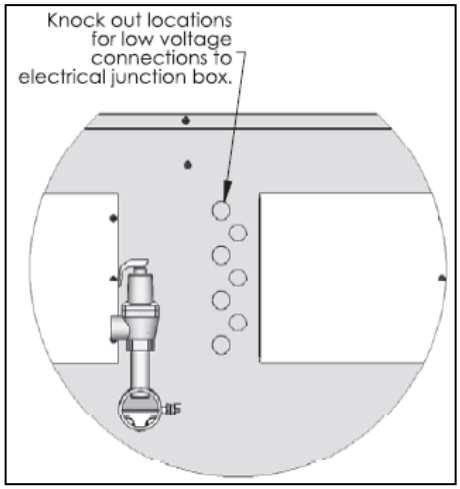

Figure 23

The electrical junction box has separate, clearly marked terminal strips for line voltage and low voltage wiring. Special jacks are provided for trouble-free cascade system wiring using standard CAT3 or CAT5 patch cables.

C. LINE VOLTAGE WIRING FOR STANDARD BOILER

1. Connect the incoming power wiring to the line voltage terminal strip in the electrical junction box at terminals LINE 120V, Neutral, and Ground of the bottom boiler (shown in Figure 26).

2. A line voltage fused disconnect switch may be required to be externally mounted and connected according to local wiring codes.

3. Connect the central heating pump motor starter coil to the terminals marked BOILER HOT, BOILER NEUT, and BOILER GRD in the bottom boiler.

4. If using DHW, connect the domestic hot water pump to the terminals marked DHW HOT, DHW NEUT, DHW GND. The connections shown are suitable for a maximum continuous pump draw of 3 amps at 120 volts. If a pump requires more current or voltage than the 120 volts supplied, an external motor starter or contactor will be required.

D. ALARM CONNECTIONS (TOP BOILER CONNECTION)

The Mod Con control system includes a dry contact alarm output. This is an SPDT circuit, rated at 5 amps at 120 volts. This contact can be used to activate an alarm light or bell, or notify a building management system if the boiler goes into a lockout condition. The circuit between the ALARM COM and NC terminals is closed during normal operation and the circuit between ALARM COM and NO is open during normal operation. The connections depicted in Figure 26 show two 120 volt lights connected to the alarm terminals. One light will be on when the boiler is in normal mode and the other light will turn on when the boiler is in lockout mode.

E. LOW VOLTAGE CONNECTIONS

1. All low voltage cables should enter the electrical junction box through the provided knock out holes shown in Figure 23.

2. Connect all low voltage field devices in the low voltage terminal strip located in the electrical junction box (shown in Figure 26).

F. THERMOSTAT

1. Connect the room thermostat to the terminals marked THERMOSTAT in the electrical junction box (shown in Figure 26) of the bottom boiler. Alternately, any dry contact closure across these terminals will cause the boiler system to run. Caution should be taken to ensure neither of the terminals becomes connected to ground.

2. Mount the thermostat on an inside wall as centrally as possible to the area being heated, but away from drafts or heat producing devices such as television sets that could influence the ability of the thermostat to measure room temperature.

3. If the thermostat is equipped with an anticipator and it is connected directly to the Mod Con boiler, the anticipator should be set at .1 amps. If the thermostat is connected to other devices, the anticipator should be set to match the power requirements of the device it is connected to. See the instruction manual of the connected devices for further information.

G. OUTDOOR SENSOR

1. There is no connection required if an outdoor sensor is not used in this installation.

2. If using an outdoor sensor, connect wires for sensor to the terminals marked OUTDOOR SEN (shown in Figure 26) in the electrical junction box of the bottom boiler. Caution should be used to ensure neither of these terminals becomes connected to ground.

3. Use a minimum 22 AWG wire for runs of 100 feet or less and minimum 18 AWG wire for runs of up to 150 feet.

4. Mount the outdoor sensor on an exterior surface of the building, preferably on the north side in an area that will not be affected by direct sunlight and will be exposed to varying weather conditions.

H. INDIRECT SENSOR (TOP BOILER CONNECTION)

1. There is no connection required if an indirect water heater is not used in this installation.

2. The boiler will operate an indirect fired water heater with either a thermostat type aquastat installed in the indirect tank, or an HTP 7250P-325 tank sensor. When a tank sensor is used, the control will automatically detect its presence and a demand for heat from the indirect water heater will be generated when the tank temperature falls below the user selected set point by more than the user selected offset. The demand will continue until the sensor measures that the indirect water heater temperature is above the set point.

3. Connect the indirect tank sensor (7250P-325) to the terminals marked DHW SENSOR (shown in Figure 26) in the electrical junction box of the top boiler.

⚠ WARNING

Caution should be used to ensure neither of these terminals becomes connected to ground.

NOTE: If sensor wires are located in an area with sources of potential electromagnetic interference (EMI), the sensor wires should be shielded, or the wires routed in a grounded metal conduit. If using shielded cable, the shielding should be connected to the common ground of the boiler.

⚠ WARNING

Failure to use the correct sensor may result in tank temperature being either above or below set point, and could result in decreased performance, substantial property damage, or heightened risk of injuries due to scalds.

⚠ DANGER

⚠ DANGER

Water temperature over 125 degrees F. can cause severe burns instantly, or death from scalds. Children, disabled, and elderly are at highest risk of being scalded. See instruction manual before setting temperature at water heater. Feel water before bathing or showering! Temperature limiting valves are available. See chart below showing temperature burn rate.

⚠ DANGER

I. OPTIONAL 0-10 VOLT BUILDING CONTROL SIGNAL

1. A signal from a building management system may be connected to the boiler to enable remote control. This signal should be a 0-10 volt positive going DC signal. When this input is enabled using the installer menu, a building control system can be used to control either the set point temperature or the heat output of the boiler. The control interprets the 0-10 volt signal as follows: When the signal is greater than 1.5 volts, the boiler will ignite. As the signal continues to rise towards its maximum of 10 volts, the boiler will increase either in set point temperature or firing rate depending on the setting of parameter 17 in the installer menu. See Part 10 for details on the setting of parameters 16 and 17 for this option.

2. Connect a building management system or other auxiliary control signal to the terminals marked 0-10 VOLT + and 0-10 VOLT – in the electrical junction box (shown in Figure 26) of the bottom boiler. Caution should be used to ensure that the 0-10 VOLT + connection does not become connected to ground.

J. OPTIONAL HIGH GAS PRESSURE SWITCH

1. If an optional high gas pressure switch is used, it should be installed on the outlet side of the gas valve. This is normally closed and will open if the pressure goes above 1.5” w.c. on the outlet side.

2. Locate the two pigtails hanging from the electrical box inside of the cabinet of the boiler with the installed switch. Remove and discard the jumper plug from one of the unused pigtails.

3. Connect the high gas pressure switch to the pigtail that you removed the jumper plug from.

K. OPTIONAL LOW GAS PRESSURE SWITCH

1. If an optional low gas pressure switch is used, it should be installed on the inlet side of the gas valve. This is normally closed and will open if the pressure goes below 1” w.c. on the inlet side.

2. Locate the two pigtails hanging from the electrical box inside of the cabinet of the boiler with the installed switch. Remove and discard the jumper plug from one of the unused pigtails.

3. Connect the low gas pressure switch to the pigtail that you removed the jumper plug from.

L. OPTIONAL FLOW SWITCH

NOTE: Follow the more detailed instructions included with the flow switch kit for proper installation steps.

NOTE: The boiler will need 2 flow switches to ensure there is enough flow through each heat exchanger of the boiler assembly.

1. Attach the correct flow paddle to the flow switch.

2. Thread brass tee onto outlet nipple using pipe dope. **Make certain the branch points up on horizontal runs.**

3. Thread flow switch into tee using pipe dope. **Make certain the FLOW arrow points in the correct direction**.

4. Disconnect red wire on the low water cut off probe and connect it to the red wire from the wire harness (included in kit).

5. Feed green ground wire into boiler through the wire access.

6. From the front of the boiler, feed the ground wire up into the control box.

7. Once into the control box, attach the green ground to the ground bus connection.

8. Connect red wire from flow switch to boiler wire harness.

9. When installation is complete, power up the boiler and use the control to access installer parameter #20 and change the default value to 2 (see Part 11 in this manual). When done, create a demand and observe boiler function to verify the installation is working properly.

NOTE: Installing the optional flow switch will disable the built-in low water cutoff. If a flow switch and a low water cutoff are necessary for the installation, purchase and install the optional UL353 LWCO (available from HTP, Part # 7350P-601). In this installation, it is recommended to install the flow switch kit first.

M. OPTIONAL UL353 LOW WATER CUT-OFF INTERFACE KIT

NOTE This boiler will require 2 interface kits to ensure both heat exchangers are full of water.

1. If an optional UL353 low water cut-off (LWCO) interface kit is used, the control box of the kit should be mounted to the left side of the boiler cabinet near the low water cut-off probe, which is located on the outlet nipple of the boiler.

2. If the optional flow switch is present on the boiler, then the orange wire from the LWCO control box is left unconnected. If the optional flow switch is not installed on or connected to the boiler, remove the wire connected to the low water cut-off probe on the boiler and connect it to the orange wire from the newly mounted LWCO control box.

3. Connect the single red wire from the control box to the low water cut-off probe on the boiler.

4. Route the rest of the wires through the hole provided in the cabinet and down by the main electrical enclosure.

5. Locate the two pigtails hanging from the main electrical enclosure. Select the pigtail which has a white, red, and brown wire in it. If the pigtail is connected to a gas pressure switch, skip to step 7. If this pigtail is not connected to a gas pressure switch, remove the jumper plug from the end of the pigtail and place the jumper plug into the mating connector coming from the LWCO control box.

6. Connect the pigtail to the remaining plug coming from the LWCO control box. Installation is complete.

7. If the pigtail located in step 5 is connected to a gas pressure switch, disconnect it from the gas pressure switch and connect the pigtail to the mating connector coming from the LWCO control box. Connect the gas pressure switch to the remaining connector from the LWCO control box.

N. WIRING OF THE CASCADE SYSTEM COMMUNICATION BUS

A termination plug is included in the CAT 3 / CAT 5 Bus Connection Point, labeled J3 in Figure 26. DO NOT REMOVE THIS PLUG! Doing so will affect boiler operation and VOID WARRANTY.

1. A Cascade Bus Termination Plug has been installed on the customer connection board of this boiler. The purpose of this plug is to stabilize communication between multiple boilers and reduce the effect of electrical “noise” on cascade bus communication. See Figures 25 and 26 for Cascade Bus Termination Plug installation detail. You will need to remove and discard this plug in order to connect the cable to the next boiler. DO NOT REMOVE the terminator unless you need to connect a cable to this port.

2. Use standard CAT3 or CAT5 computer network patch cables to connect the communication bus between each of the boilers. This cable can be connected between any of the boilers in the system. For example, you could connect the top boiler to the next top boiler. These cables are readily available at any office supply, computer, electronic, department or discount home supply store in varying lengths. If you possess the skills you can also construct custom length cables.

3. It is recommended to use the shortest length cable that will reach between the boilers and create a neat installation. Do not run unprotected cables across the floor where they may become wet or damaged. Avoid running communication cables parallel and close to or against high voltage (120 volt or greater) wiring. HTP recommends that the maximum length of communication bus cables not exceed 200 feet.

4. Route the communication cables through one of the knockouts in the cabinet.

5. Connect the boilers in a daisy chain configuration as shown below. It is best to wire the boilers using the shortest wire runs rather than trying to wire them in the order that they are addressed. The communication bus jacks on the customer connection panel are interchangeable so you can use either one or both in any order to connect the cable.

If you have connected the boilers to each other properly, there will be no open communication connection ports.

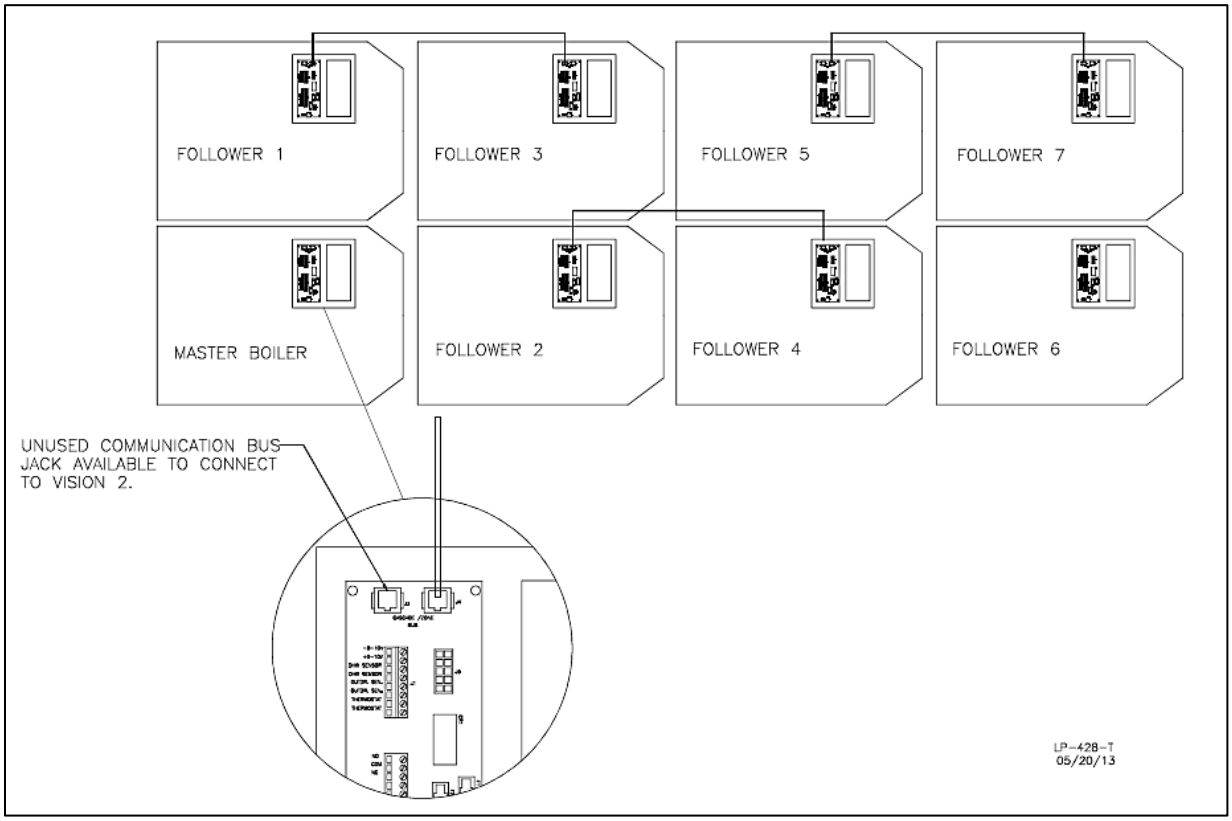

Figure 24

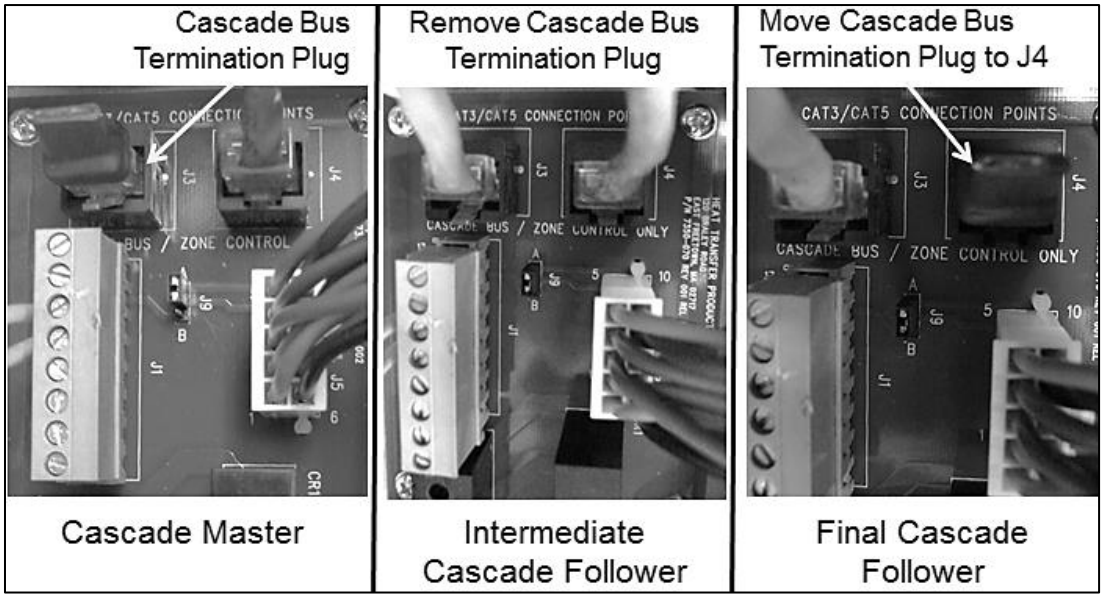

Figure 25 – Cascade Resistor Plug Installation Detail

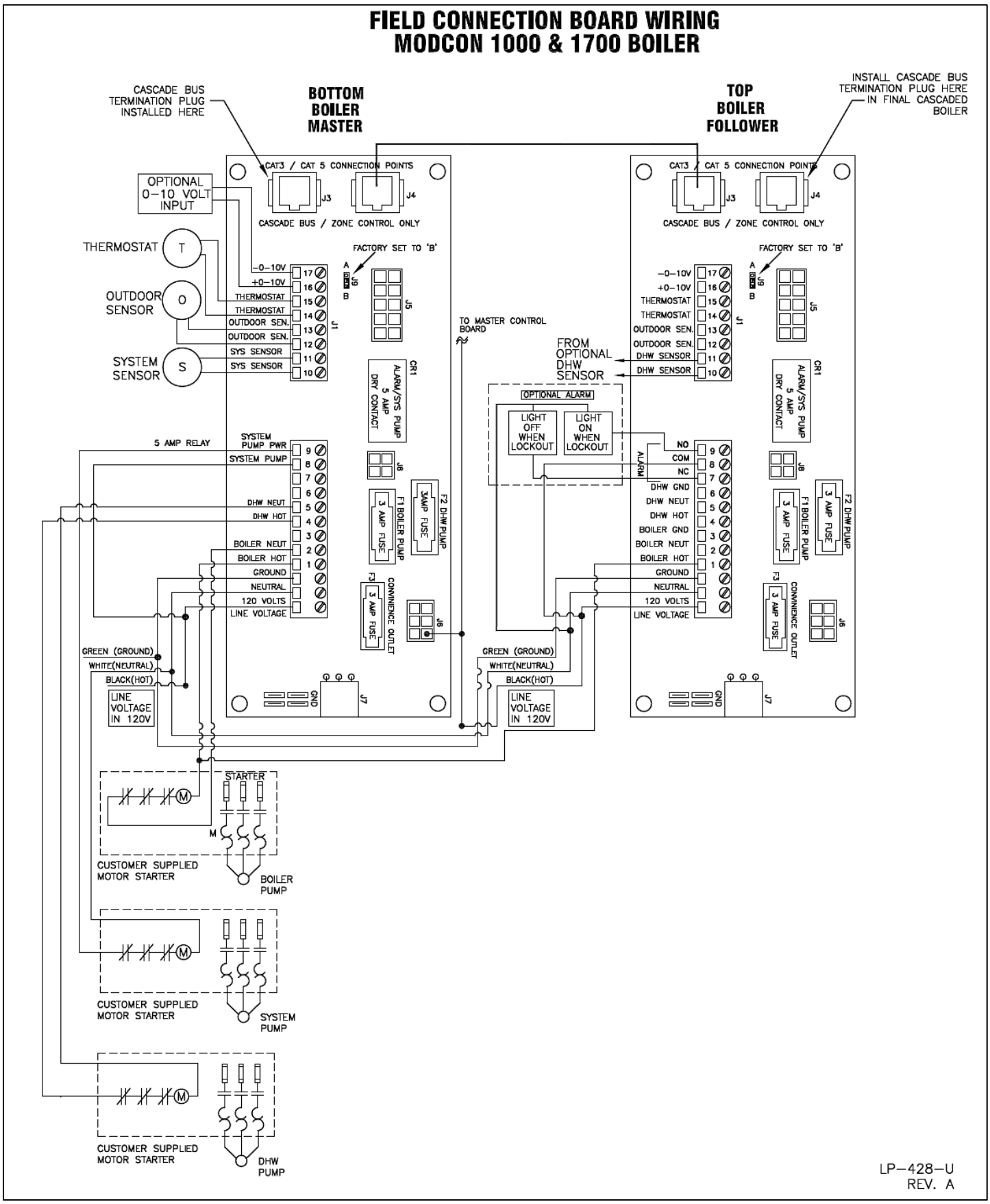

Figure 26 – Mod Con Cascade Master and Follower Wiring

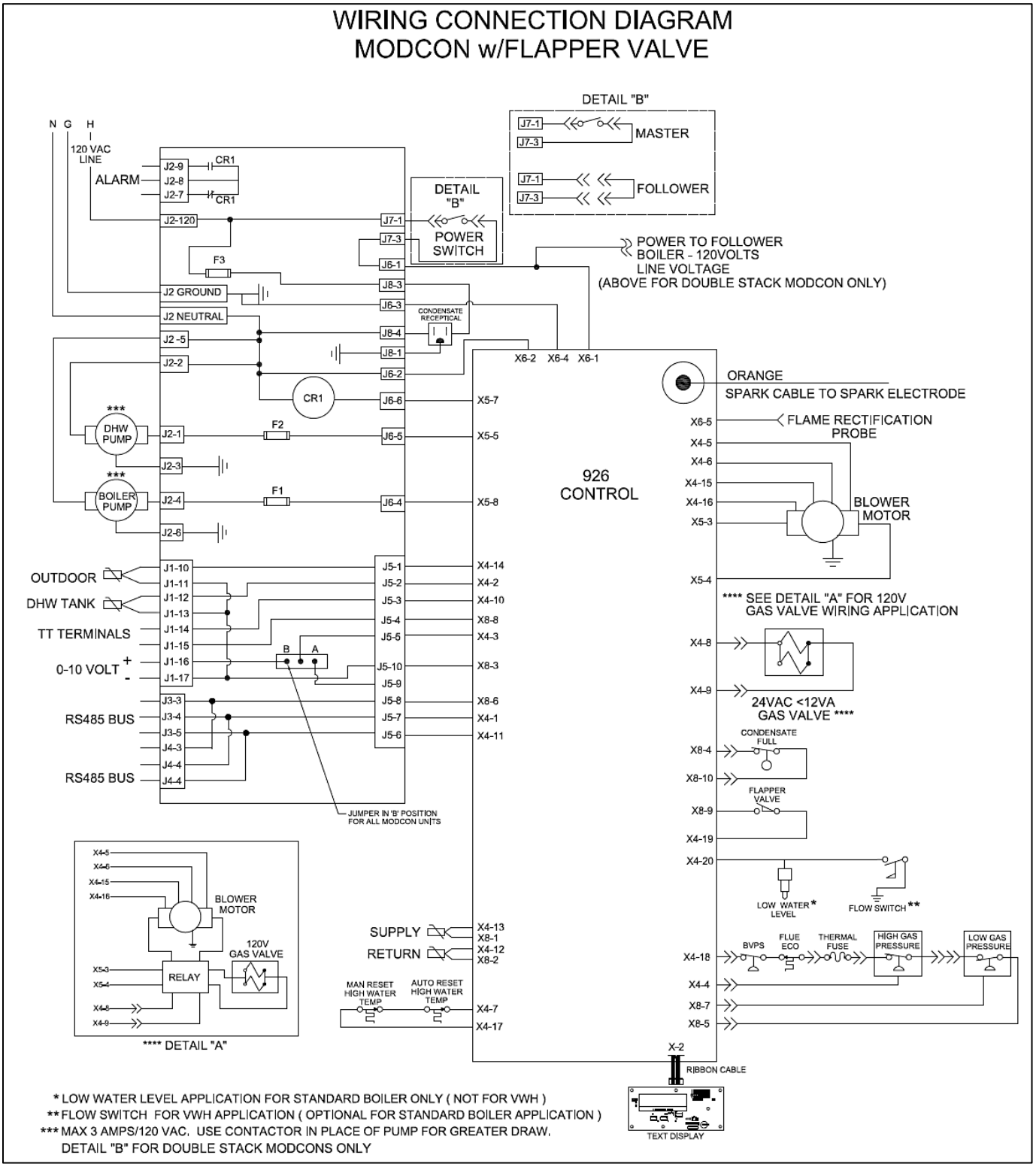

Figure 27 – Mod Con Internal Connection Diagram – LP-428-K

PART 8 – START-UP PREPARATION

⚠ WARNING
Thoroughly clean and flush any system that has used glycol before installing the boiler. Provide the customer with a material safety data sheet (MSDS) on the fluid used.

A. CHECK / CONTROL WATER CHEMISTRY

CAUTION

Chemical imbalance of your water can cause severe damage to your boiler and associated equipment, and may also affect efficiency. You may have to have your water quality professionally analyzed to determine whether you need to install a water softener. It is important that the water chemistry on both the domestic hot water and central heating sides are checked before installing the boiler, as water quality will affect the reliability of the system. Outlined below are those water quality parameters which need to be met in order for the system to operate efficiently for many years. **Failure of a heat exchanger due to lime scale build-up on the heating surface, low pH or other imbalance IS NOT covered by the warranty.**

It is recommended that you test your water quality prior to installation. Listed below are some guidelines.

⚠ WARNING

Do not use petroleum-based cleaning or sealing compounds in the boiler system. Damage to elastomer seals and gaskets in the system could occur, resulting in substantial property damage.

Water pH between 6.0 and 8.0
1. Maintain boiler water pH between 6.0 and 8.0. Check with litmus paper or have it chemically analyzed by a water treatment company.

2. If the pH differs from above, consult local water treatment company for treatment needed.

Hardness less than 7 grains
Consult local water treatment companies for unusually hard water areas (above 7 grains hardness).

Chlorine concentration less than 100 ppm
1. Do not connect the boiler to directly heat a swimming pool or spa water.

2. Do not fill boiler or operate with water containing chlorine in excess of 100 ppm.

Clean system to remove sediment
1. You must thoroughly flush the system (without the boiler connected) to remove sediment. The high-efficiency heat exchanger can be damaged by buildup or corrosion due to sediment build up.

2. For zoned systems, flush each zone valve separately through a purge valve. (If purge valves and isolation valves are not already installed, install them to properly clean the system.)

3. Flush system until water runs clean and you are sure piping is free of sediment.

Test/replace freeze protection fluid
1. For systems using freeze protection fluids, follow fluid manufacturer's instructions to verify inhibitor level and that other fluid characteristics are satisfactory.

2. Freeze protection fluid must be replaced periodically due to degradation of inhibitors over time. Follow all fluid manufacturer's instructions.

Hardness: 7 grains
Chloride levels: 100 ppm
pH levels: 6-8
TDS: 2000 ppm
Sodium: 20 mGL

B. FREEZE PROTECTION (WHEN USED)

⚠ WARNING

NEVER use automotive or standard glycol antifreeze, or ethylene glycol made for hydronic systems. Use only freeze-protection fluids certified by fluid manufacturer as suitable for use with stainless steel boilers, verified in fluid manufacturer's literature. Thoroughly clean and flush any system that has used glycol before installing the new boiler. Provide boiler owner with a material safety data sheet (MSDS) on the fluid used.

1. Determine freeze protection fluid quantity using total system water content following fluid manufacturer's instructions. Remember to include expansion tank water content.

2. Local codes may require back flow preventer or actual disconnect from the city water supply.

3. When using freeze protection fluid with automatic fill, install a water meter to monitor water makeup. Freeze protection fluid may leak before the water begins to leak, causing concentration to drop, reducing the freeze protection level.

C. FILL AND TEST WATER SYSTEM

1. Fill system only after ensuring the water meets the requirements of this manual.

⚠ WARNING

Ensure the boiler is full of water before firing the burner. Failure to do so will damage the boiler. Such damage IS NOT covered by warranty, and could result in property damage, severe personal injury, or death.

2. Close manual and automatic air vents and boiler drain valve.

3. Fill to correct system pressure. Correct pressure will vary with each application.
   a. Typical cold water fill pressure for a residential system is 12 PSI.
   b. Pressure will rise when boiler is turned on and system water temperature increases. Operating pressure must never exceed 160psig.

4. At initial fill and during boiler startup and testing, check system thoroughly for any leaks. Repair all leaks before proceeding.

CAUTION

Eliminate all system leaks. Continual fresh make-up water will reduce boiler life. Minerals can build up in the heat exchanger, reducing heat transfer, overheating heat exchanger, and causing heat exchanger failure. Such failure IS NOT covered by warranty.

5. The system may have residual substances that could affect water chemistry. After the system has been filled and leak tested, verify that water pH and chlorine concentrations are acceptable by sample testing.

CAUTION

It is important to purge the system of air to avoid damage to the boiler.

D. PURGE AIR FROM WATER SYSTEM

CAUTION

IMPORTANT! While commissioning the system, the air vent on top of the boiler must remain fully open to allow the boiler to properly fill. Failure to keep the air vent open could lead to improper boiler and system operation.

To purge air from the system:

a. Connect a hose to the purge valve and route hose to an area where water can drain and be seen.
b. Close the boiler or system isolation valve between the purge valve and fill connection to the system.
c. Close zone isolation valves.
d. Open quick-fill valve on cold water make-up line.
e. Open purge valve.
f. Open the isolation valves one zone at a time. Allow water to run through the zone, pushing out the air. Run water until no noticeable air flow is present. Close the zone isolation valves and proceed with the next zone. Follow this procedure until all zones are purged.
g. Close the quick-fill water valve and purge valve and remove the hose. Open all isolation valves. Watch the system pressure rise to correct cold-fill pressure. It is recommended that you put the pumps into manual operation to assist in purging the circuits.
h. Disconnect the wires that are connected to the THERMOSTAT terminals of the customer connection board. Apply power to the boiler. The display will show the temperature of the water in the boiler. Press the ▼ and ENTER keys simultaneously and hold for 1 second. The display will read:

```
SERVICE PUMP CH
PUMP ON        11:47A
```

The central heating pump will come on. If you then press the ▲ key, the central heating pump will shut off. The display will read:

```
SERVICE PUMP DH
PUMP ON        11:47A
```

The DHW pump will come on. If the boiler is set up as the cascade master and you press the ▲ key again, the DHW pump will shut off. The display will read:

```
SERVICE PUMP SH
PUMP ON        11:47A
```

The system pump will come on. Use the ▲ and ▼ keys to toggle between running each pump in the system as required to help bleed out all entrapped air. Some good indicators that air is removed include the absence of gurgling noises in the pipes and pump operation becoming very quiet. Pressing ▲ and ▼ together at any time will return the boiler to normal operation.

i. After the system has operated for some time, eliminate any residual air by using the manual air vents located throughout the system.

j. If purge valves are not installed in the system, open manual air vents in the system one at a time, beginning with the lowest floor. Close vent when water squirts out. Repeat with remaining vents.

k. Refill to correct pressure.

k. Refill to correct pressure.

E. CHECK FOR GAS LEAKS

⚠ WARNING

Before starting the boiler, and during initial operation, smell near the floor and around the boiler for gas odorant or any unusual odor. Remove boiler front door and smell interior of boiler enclosure. Do not proceed with startup if there is any indication of a gas leak. Repair any leaks at once.

⚠ WARNING

PROPANE BOILERS ONLY – Propane suppliers mix an odorant with the propane to make its presence detectable. In some instances, the odorant can fade, and the gas may no longer have an odor. Before startup (and periodically thereafter), have the propane supplier verify the correct odorant level in the gas.

F. CHECK THERMOSTAT CIRCUIT(S)

1. Disconnect the two external wires connected to the boiler thermostat terminals (low voltage terminal strip).

2. Connect a voltmeter across these two incoming wires with power applied to the thermostat circuits. Close each thermostat, zone valve, and relay in the external circuit one at a time and check the voltmeter reading across the incoming wires.

3. There should NEVER be a voltage reading.

4. If a voltage reading does occur under any condition, check and correct the external wiring. (This is a common problem when using 3-wire zone valves).

5. Once the external thermostat circuit wiring is checked and corrected if necessary, reconnect the external thermostat circuit wires to boiler low voltage terminal strip. Allow the boiler to cycle.

G. CONDENSATE REMOVAL

1. The boiler is a high efficiency condensing boiler. Therefore, the unit has a condensate drain. Condensate fluid is nothing more than water vapor, derived from combustion products, similar to that produced by an automobile when it is initially started.

Condensation is slightly acidic (typically with a pH of 3 to 5) and must be piped with the correct materials. Never pipe the condensate using steel, copper, brass or other materials that will be subject to corrosion. Plastic PVC or CPVC pipe are the only approved materials.

A condensate neutralizer, if required by local authorities, can be made up of lime crystals, marble or phosphate chips that will neutralize the condensate. This may be done by the installer or you may purchase a condensate neutralizer from HTP (7350-025).

2. The boiler is equipped with a ¾ FPT connection that must be piped to a local drain. It is very important that the condensate line is sloped downward away from the boiler to a suitable inside drain. If the condensate outlet on the boiler is lower than the drain, you must use a condensate removal pump, available from HTP (554200). This pump is equipped with two leads that can be connected to an alarm or another type of warning device to alert the user of a condensate overflow, which, if not corrected, could cause property damage.

3. If a long horizontal run is used, it may be necessary to create a vent in the horizontal run to prevent a vacuum lock in the condensate line.

4. Do not expose the condensate to freezing temperatures.

5. It is very important you support the condensation line to assure proper drainage.

H. FINAL CHECKS BEFORE STARTING BOILER

1. Read Startup Procedures within this manual for proper steps to start boiler. (See Startup Report to record steps for future reference.)

2. Verify the boiler and system are full of water and all system components are correctly set for operation.

3. Fill condensate trap with water.

4. Verify electrical connections are correct and securely attached.

5. Inspect exhaust vent and intake piping for signs of deterioration from corrosion, physical damage or sagging. Verify exhaust vent and intake piping are intact and correctly installed per Venting Section and local code.

6. Ensure both boiler power switches are activated before running the boiler.

I. CASCADE SYSTEM

If the boiler is used in a stand-alone configuration, skip this section.

Programming the Bottom (Master) Boiler:

1. Make sure there is no demand for heat. The boiler cannot be programmed if there is a demand for heat.

2. Apply power to the boiler.

3. Enter the Installer Menu following instructions in Part 11 of this manual.

4. Verify that parameter 15 is set to 0. This makes the master boiler address 0. **NOTE:** The master boiler MUST be addressed as 0.

5. Verify that Parameter 23 is set to Common Flue. This makes it the master boiler.

6. Exit the installer menu.

Additional Connected Mod Con 1000 and 1700 Follower Boilers:

READ THE NOTES BELOW BEFORE PROGRAMMING FOLLOWER BOILERS

- If one of the follower boilers has an indirect fired water heater connected directly to it, the address of this boiler must be 2 or greater.
- It is recommended but not necessary to address boilers in the order that they are wired.
- No two boilers can have the same address.

1. Make sure there is no demand for heat. Boilers cannot be programmed if there is a demand for heat.

2. Apply power to the follower boiler you are working on.

3. Enter the installer menu following instructions in Part 10 of this manual.

4. Set parameter 15 to 1 for the first follower, 2 for the second follower, etc., depending on the boiler you are programming.

5. Verify that Parameter 23 is set to Common Flue.

6. Exit the installer menu.

PART 9 – START-UP PROCEDURE

⚠ WARNING

FOR YOUR OWN SAFETY READ BEFORE OPERATING

1. This boiler does not have pilot. It is equipped with an ignition device which automatically lights the burner. Do not try to light the burner by hand.

2. BEFORE OPERATING: smell all around the boiler area for gas. Be sure to smell next to the floor because some gas is heavier than air and will settle on the floor.

WHAT TO DO IF YOU SMELL GAS

- Do not try to light any boiler.
- Do not touch any electric switch; do not use any phone in your building.
- Immediately call your gas supplier from a neighbor's phone. Follow the gas suppliers' instructions.
- If you cannot reach your gas supplier, call the fire department.
- Turn off gas shutoff valve (located outside of the boiler) so that the handle is crosswise to the gas pipe. If the handle will not turn by hand, don't try to force or repair it, call a qualified service technician. Force or attempted repair may result in a fire or explosion.

4. Do not use this boiler if any part has been under water. Immediately call a qualified service technician to inspect the boiler and to replace any part of the control system and any gas control that has been damaged.

5. The boiler shall be installed so the gas ignition system components are protected from water (dripping, spraying, rain, etc.) during boiler operation and service (circulator replacement, condensate trap, control replacement, etc.)

Failure to follow these instructions could result in property damage, serious personal injury, or death.

⚠ WARNING

If you discover any evidence of a gas leak, shut down the boiler at once. Find the leak source with a bubble test and repair immediately. Do not start the boiler again until the leak is repaired. Failure to comply could result in substantial property damage, severe personal injury, or death.

A. CONTROL OVERVIEW

The control is one of the primary safety devices of the boiler. It monitors the safety sensors of the boiler to assure safe and efficient operation.

The control has many features associated with system design. This section addresses programming features, including Boiler Settings / System Settings / Maintenance Settings and System Diagnostics, to help in customizing your control. It is important to fully understand control capabilities before customization, as its factory defaults may already fit your system design and not require any adjustment at all.

B. NAVIGATION OF THE DISPLAY

The display includes a two-line backlit LCD readout to provide informative messages about the operation of the boiler. Many operating parameters can be viewed and adjusted by using the six buttons on the display. The function of each button is described below.

RESET – The RESET button has two functions.
– Resets any lockout error code
– Returns the user to the default display screen.

```
ENTER   MENU   CODE
000
```

ENTER – The ENTER key is used to enter the parameter programming mode. To enter this mode, hold down the ENTER key for more than 4 seconds. The readout will change to:

One of the zeroes will be blinking. Use the ▲▼ arrow keys to change the blinking digit to the correct value. Use the ◀ ▶ arrow keys to select the next digit to change and again use the ▼▲ keys to change the value. Repeat until the correct code is entered. Press the **ENTER** key to accept the code entered. If the code is correct, the readout will change to the appropriate screen. If the programming code is not accepted, the readout will continue to display as shown above.

The **ENTER** key is also used to enable a function for editing. After the user navigates to the desired function, the user would hold down the **ENTER** key for one second. When the **ENTER** key is released, the function value will begin to blink. The function can now be changed using the ▼▲ **ARROW** keys. After the new value is displayed, the user then presses the **ENTER** key for 1 second to lock the new value of the function in. The value will then stop blinking.

LEFT AND RIGHT ARROW KEYS – ◀ ▶ are used to navigate between the default display, status display, analog and cascade displays if they are enabled. The ◀ ▶ keys are also used in programming modes to change between the programmable functions. It is

recommended you use the Menu Maps in the back of this manual and the detailed menu instructions printed in this section to help in menu navigation.

UP AND DOWN ARROW KEYS – ▼▲ are used to navigate between the various functions displayed in the menu. After the function is enabled for editing by pushing the **ENTER** key, the ▼▲ keys are used to adjust the function upward or downward to the desired value.

C. OPERATING INSTRUCTIONS

Before operating the boiler, it is important to remove the cover and verify that the gas line and water lines are connected to boiler and fully purged. If you smell gas, STOP; Follow the safety instructions listed in the first part of this section. If you do not smell gas, follow the next steps.

1. Turn down the thermostats before applying power to the boiler. If 0–10 volt or other inputs are used, make sure that they are set so there is no call for heat while programming.

2. Turn on the power to the boiler or boilers if a cascade system used.

3. Next, check the boiler settings. Adjustment and factory defaults are outlined within this section. If a cascade system is used, it is important that all the boilers have the same boiler settings.

4. Next, check the system settings. Adjustments and factory defaults are outlined within this section. If a cascade system is used, it is important that the Master Boiler is programmed with the correct system settings.

5. Create a demand on the boiler or boilers if a cascade system is used. The user can monitor system functions when the boilers are operational.

6. If the boilers fail to start, refer to the troubleshooting section in the back of this manual.

D. PROGRAMMING BOILER SETTINGS

Boiler Setting Program Access

NOTE: Programming the boiler control is not possible when the boiler is firing. Make sure any input which can create a demand on the boiler, such as the tank thermostat, is turned off, so the boiler will remain idle to allow programming.

SCREEN	DESCRIPTION
ENTER MENU CODE 000	To access the boiler setting program, press and hold the **ENTER** Key for 4 seconds, until the display shows the screen at left.
ENTER MENU CODE 600	Using the arrow keys, log in the **Boiler Menu Access Code "600"**. To confirm the code, press **ENTER** to access **Boiler Setting Program** navigation menu.

Table 11 – Programming Screens

Boiler Setting Program Navigation

Once the code is confirmed, the user can now start to set **the Boiler Settings**. Use the arrow keys on the display to navigate through the **Boiler Setting Program**. A blinking setting indicates it can be changed. To change a setting, press the **ENTER** Key. Boiler settings can be increased by pressing the **UP ARROW ▲** and decreased by pressing the **DOWN ARROW ▼** on the display. When done, press **ENTER**. Setting will stop blinking and you can move on to next setting. Press **RESET** to exit programming and store settings. Listed below are the boiler settings that can be programmed into the control.

SCREEN	DESCRIPTION
CENTRAL HEAT 180 ^{o}F	**Function:** Adjusts the boiler set point. Default: 180°F (Range: 50°F to 190°F).
CENTRAL DIFF SET 30 ^{o}F	**Function:** Adjusts the boiler differential set point. Default: 30°F (Range: 5°F to 30°F).
DHW SET POINT 119 ^{o}F	**Function:** Adjusts the indirect tank set point. Default: 119°F (Range: 70°F to 185°F).
DHW DIFF SET POINT 7 ^{o}F	**Function:** Adjusts the indirect tank differential set point. Default: 7°F (Range: 1°F to 30°F).
TEMP DISPLAY C OR F ^{o}F	**Function:** Adjusts the temperature measurement in F = Fahrenheit to C = Celsius (Default is Fahrenheit).

Table 12 – Boiler Setting Screen Descriptions

Clock Settings
(NOTE: The clock will reset if the boiler is powered off for more than a week.)

SCREEN	DESCRIPTION
CLOCK MODE (12/24) 08/28/2009 Fr 9:42A	**Function:** Changes the clock from 12 hour mode (8:45 PM) to 24 hour mode (20:45). To change to 24 hour mode, press the **ENTER** key. The letter (A or P) after the time will blink. Press the up or down arrow key once and the letter will disappear. Press the **ENTER** key to save the new setting.
CLOCK HOUR 08/28/2009 Fr 10:01A	**Function:** Allows the user to adjust the hour setting.
CLOCK MINUTE 08/28/2009 Fr 10:01A	**Function:** Adjusts the minute setting.
CLOCK DAY OF WEEK 08/28/2009 Fr 10:01A	**Function:** Adjusts the day of week.
CLOCK DATE MODE 08/28/2009 Fr 10:01A	**Function:** Allows the user to switch to European date format (2009/08/28) from US format (08/28/2009).
CLOCK YEAR 08/28/2009 Fr 10:01A	**Function:** Adjusts the year setting.
CLOCK MONTH 08/28/2009 Fr 10:01A	**Function:** Adjusts the month setting.
CLOCK DATE 08/28/2009 Fr 10:01A	The clock is set.

Table 13 – Clock Setting Screens

NOTE: The clock does not automatically adjust for Daylight Savings Time, and requires manual adjustment.

E. PROGRAMMING THE SYSTEM SETTING

System Setting Program Access
NOTE: Programming the boiler control is not possible when the boiler is firing. Make sure any input which can create a demand on the boiler, such as the tank thermostat, is turned off, so the boiler will remain idle to allow programming.

SCREEN	DESCRIPTION
ENTER MENU CODE 000	To access the boiler setting program, press and hold the **ENTER** Key for 4 seconds, until the display shows the screen at left.
ENTER MENU CODE 925	Using the arrow keys on the display, log in your **System Menu Access Code "925"**. To confirm code, press **ENTER** to access system setting program navigation menu.

Table 14 – System Setting Access

F. SYSTEM SETTING PROGRAM NAVIGATION

Once the **System Menu Access Code** is confirmed, the user can begin to set the system setting menu. Use the ◄ ► arrow keys on the display to navigate through the system setting program. To change a setting, press **ENTER**. System settings can be **increased** by pressing the **UP ARROW** and **decreased** by pressing the **DOWN ARROW** on the display. When done, press **ENTER**. Setting will stop blinking and you can move on to next setting. Press **RESET** to exit programming and store settings. Listed below are the boiler settings that can be programmed into the control.

SCREEN	DESCRIPTION
Function 1	**Factory Program Mode**
MODE INDIRECT 1	This screen indicates that the control is configured correctly. Do not change this setting.
Function 3	**DHW Tank Max Temp**
DHW TANK MAX TEMP 180 ^{o}F 3	This is the maximum temperature that can be selected for the DHW indirect tank set point in the boiler menu. Default: 180°F (Range: 95°F to 180°F).
Function 6	**DHW Post Pump Time**
DHW POST PUMP TIME 0 MINUTES 6	The indirect pump has the ability to post purge energy from the boiler to run the pump after the set point has been achieved. Please note that running the pump for a time greater than 5 minutes may cause tank energy to be released back to the boiler heat exchanger. Default: 0 Minutes (Range: 0 – 10 minutes).

Function 7	**Warm Weather Shutoff**
WARM WEATHER OFF 68 ^{o}F 7	When used with an outdoor sensor, warm weather shut down will disable the boiler if the programmed outdoor temperature is exceeded. Default: 68°F (Range: 41°F to 122°F).
Function 8	**Min Outdoor Temp**
MIN OUTDOOR TEMP 5 ^{o}F 8	Sets the minimum outdoor design temperature for the system. Default: 5°F (Range: -49°F to 32°F).
Function 9	**Max Supply Temp**
MAX SUPPLY TEMP 190 ^{o}F 9	Sets the maximum design supply temperature based on the minimum outdoor design temperature. Default: 190°F (Range: 77°F to 190°F).
Function 10	**Max Outdoor Temp**
MAX OUTDOOR TEMP 68 ^{o}F 10	Sets the maximum outdoor design temperature for the system design. Default: 68°F (Range 32°F to 190°F).
Function 11	**Min Supply Temp**
MIN SUPPLY TEMP 95 ^{o}F 11	Sets the design supply water temperature based on the maximum outdoor design temperature. Default: 95°F (Range: 32°F to 190°F).
Function 12	**Min Boiler Temp**
MIN BOILER TEMP 68 ^{o}F 12	Sets the design minimum heat curve temperature for central heat. Default: 68°F (Range: 32°F to 190°F).
Function 13	**CH Post Pump Time**
CH POST PUMP TIME 0 MINUTES 13	Allows the user to set the boiler pump post purge time once the thermostat is satisfied. Default: 0 minutes (Range: 0 – 10 minutes).
Function 14	**DHW Priority**
DHW PRIORITY 30 MINUTES 14	Allows the user to set the maximum run time for the indirect fired water heater and the minimum run time for central heating. Default: 30 minutes (Range: 0 – 60 minutes).
Function 15	**Cascade Address**
CASCADE ADDRESS 0 15	Bus addressing boilers (maximum boilers allowed 8 in a cascade system). Master Boiler address is 0 and Following Boilers are addressed 1 thru 7. Default: 0 (Range: 0 – 8). NOTE: DO NOT USE ADDRESS 8.
Function 16	**Optional Inputs**
OPTIONAL INPUT RETURN SEN 16	Allows the user to select from optional inputs to control or monitor the system. Default: RETURN (Range: Off / Booster Board / 0-10 Volt / DHW Sensor / Return Sen).
Function 17	**0-10 Volt Function**
0-10 VOLT FUNCTION TEMPERATURE 17	Allows the user to control boiler modulation through temperature control. Default: Temperature (Range: Temperature or Fan Speed).
Function 18	**Step Modulation Mode**
STEP MODULATE MODE ON 18	Allows the user to turn ON the step modulation, which regulates burner output in six steps at one minute intervals. Step modulation will start at the last modulation rate of the boiler and work up one minute at a time. Default: OFF (Selection: OFF or ON).
Function 19	**Boiler DHW Temp**
BOILER SUPPLY DHW 180°F 19	Allows the user to program the boiler supply water temperature to the indirect heat exchanger during a demand cycle. Default: 180°F (Range: 119°F to 190°F).
Function 20	**Water Safety Input**
WATER SAFETY INPUT WATER PRESSURE 20	The user can select various water safety inputs used in the boiler system. Default: Flow Switch (Range: None / Low Water Cut off / Flow Switch / Water Pressure).
Function 21	**Error Outdoor Sensor**
ERROR OUTD SENSOR OFF 21	Allows the user to set the control to display an error message if an outdoor sensor is open or shorted. NOTE: This error does not stop the boiler from running. Factory Default: OFF (Range: ON / OFF / PHOEN ON).
Function 22	**Adjust Boiler Output %**
ADJ BOILER OUTPUT 100% 22	Allows the user to adjust the boiler output down from 100% to 50%. Factory Default: 100%. (Range: 100% – 50%)
Function 23	**Cascade Mode**
CASCADE MODE VISION 3 23	Allows the user to select cascade mode. Factory Default: COMMON FLUE (Range: 926 Boilers / COMMON FLUE).
Function 24	**Cascade Rotation**
CASCADE ROTATION 48 HOURS 24	Sets the amount of hours before the first boiler in the cascade firing rotation will be changed. NOTE: If this parameter is set to 0, the firing order of the boilers will not rotate. Default: 48 hours (Range: 0 – 240 hours).
Function 25	**Cascade DHW Mode**
NOT USED NOT USED 25	Not used on this product.
Function 26	**System Freeze Protect**
SYS FREEZE PROT PROTECT OFF 26	**NOTE:** This parameter is only present if the boiler is a cascade master. Allows the user to set the freeze protection when a system pump is used. Factory Default: OFF. Selection of temperature activates freeze protection. (Range: OFF, -40°F – 104°F).
Function 27	**Error System Sensor**
ERROR SYSTEM SENS ON 27	Allows the user to set the control to display an error message if the system sensor is open or shorted. NOTE: This error does not stop the boiler (or boilers) from running. Factory Default: ON (Range: ON / OFF).

Function 28	Freeze Protection
FREEZE PROTECTION ON 28	Allows the user to set freeze protection on the boiler. Factory Default: ON (Range: ON / OFF).
Function 29	**DHW Modulation Mode**
DHW MODULATE MODE NORMAL MOD 29	This parameter controls how the boiler modulates for a DHW demand. In NORMAL MOD mode, the boiler will modulate down from high fire when there is a DHW demand. In LOW MOD mode, the boiler will modulate up from low fire when there is a DHW demand. This mode is useful to minimize short cycling when a large boiler and small indirect tank are used together. Factory Default: NORMAL MOD (Range: NORMAL MOD / LOW MOD).
Function 30	**Extra Boiler Mode**
EXTRA BOILER MODE OFF 30	Allows for a non HTP boiler to be controlled when the cascade output has risen above the percent of the cascade firing rate set in this parameter. Factory Default: Off (Range: 50% - 100%).
Function 31	**System Sensor Mode**
SYSTEM SENSOR MODE OFF 31	Suppresses the 'NO FOLLOWER' message on the display if the boiler is used as a cascade master boiler with no follower boilers connected. Factory Default: OFF (Range: ON / OFF).
Function 32	**Service Schedule**
SERVICE SCHEDULE OFF 32	Allows the user to select a service date or time based on the boiler run hours to program the boiler maintenance schedule. Factory Default: OFF (Range: Date or Run Hours). NOTE: Without setting this function, Functions 33/34/35/36 will not display.

Table 15 – System Setting Menu Screens

NOTE: For the following functions, you must have your maintenance function turned on.

To change, press **ENTER**. The left most digit will begin to blink. Use the up ▲ or down ▼ arrows to change the digit. Use the ◀ ▶ arrow keys to switch between digits. When you've made your selection, press **ENTER** again.

SCREEN	DESCRIPTION
Function 33	**Year**
SERVICE SCHEDULE YEAR 00/00/2000 33	Allows the user to set the year of the next service reminder.
	Hours
SERVICE SCHEDULE 10000's 000000h 33	Allows the user to set the left two digits of the amount of run hours before next service reminder.
Function 34	**Month**
SERVICE SCHEDULE MONTH 00/00/2000 34	If the date function was selected, this function allows the user to program the month. If you selected the run hour function, you will need to program 10,000 hours, if required.
	Hours
SERVICE SCHEDULE 10000's 000000 34	Allows the user to set the two middle digits of the amount of run hours for the next service reminder.
Function 35	**Day**
SERVICE SCHEDULE DAY 00/00/2000 35	Allows the user to set the day of next service reminder.
	Hours
SERVICE SCHEDULE 10000's 000000 35	Allows the user to set the 2 right digits of the amount of run hours for the next service reminder.
Function 36	**Telephone**
TELEPHONE # 000 000 0000 36	Allows the user to input a telephone number that will be displayed when maintenance is required.

Table 16 – Maintenance Reminder Function Screens

G. RESETTING THE MAINTENANCE SCHEDULE

When the system control flashes MAINTENANCE REQUIRED, it is advisable that you call for service. After the service is performed, reset the schedule for the next required service by using the following steps.

Press **ENTER** on the display for 3 seconds. The Menu code will appear as 000. This does not change. Press **ENTER** again. SERVICE SCHEDULE RESET will be displayed. Using the right arrow key ▶ scroll to the selection of year or hours. Select enter to reset the mode you are in. Use the up ▲ or down ▼ arrow key for each adjustment then select **ENTER** when reset is complete.

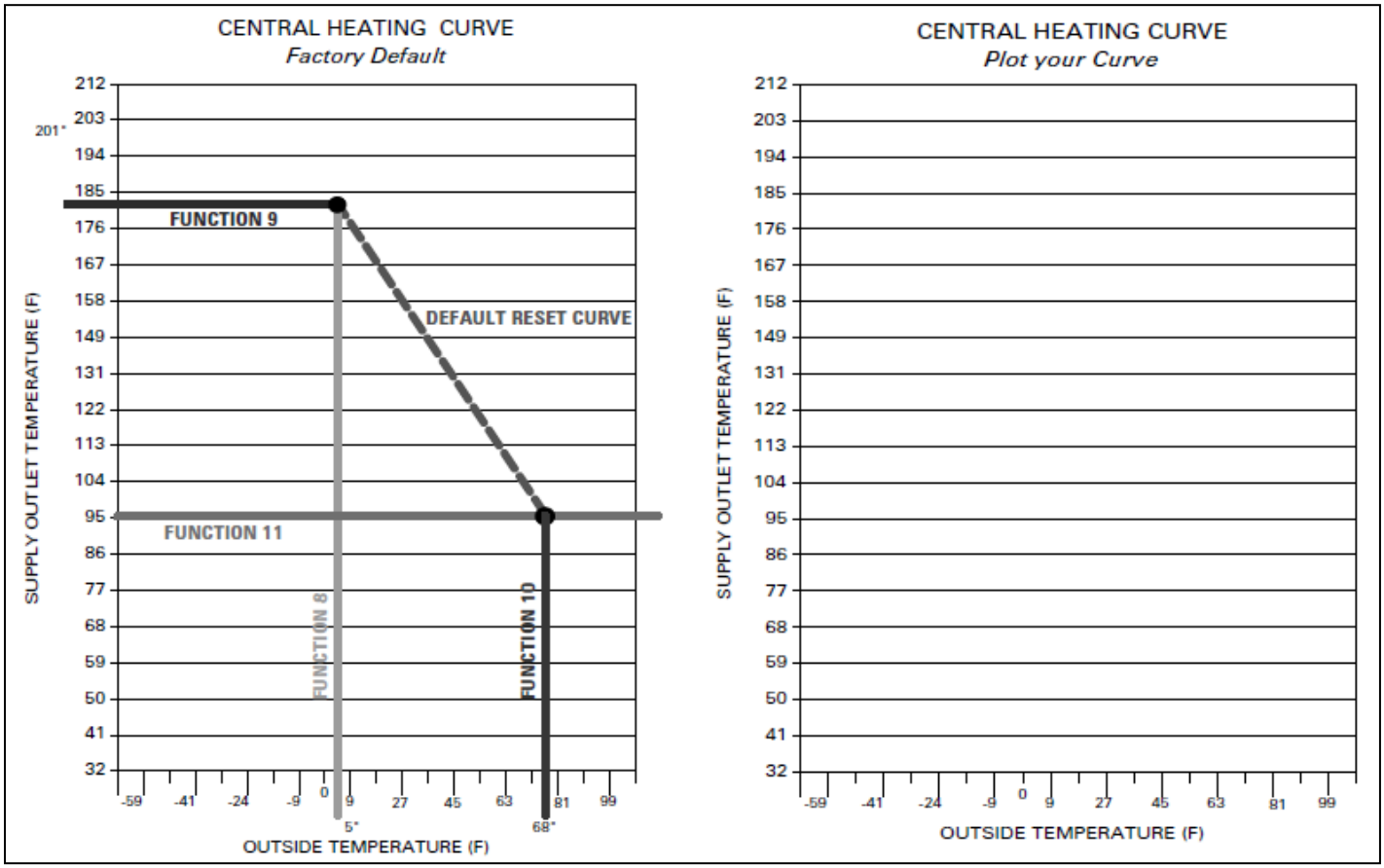

Table 17 – NOTE: It is important to note that the user can adjust the heat curve down by lowering the central heating temperature.

PART 10 – START-UP PROCEDURES FOR INSTALLER

A. BOILER CONTROL STATUS MENU

The boiler control also has the ability to review the status of the system. To access the status screens, simply press the right arrow ▶. Once the first value is displayed, press the up arrow ▲ or down arrow ▼ to access additional information. At any point you may press the RESET button to exit the status screen. Listed below are the status screens.

SCREEN	DESCRIPTION
SUPPLY SEN 180°F RETURN SEN 150°F	This screen is displayed after pressing the ▶ key as described above. This shows the actual temperature that the supply and return sensors are measuring. NOTE: If the boiler is configured to use a 0 – 10 volt input, the return sensor is disabled and the second line of the display will be blank.
Press the ▼ key once.	
CH SET 180°F SUPPLY 122°F	The screen displays the current central heating temperature set point on the top line. NOTE: This temperature set point may vary from what was set in the boiler settings if an outdoor sensor is used. The actual temperature measured by the supply sensor is displayed on the bottom line.
Press the ▼ key once.	
CH DEMAND OFF BOILER	This screen displays the central heat demand set for the cascade system.
Press the ▼ key once.	
0-10 SIGNL ON *	Shows if 0 – 10 volt is enabled.
Press the ▼ key once.	
CAS SET 190°F SYSTEM 112°F	**NOTE:** This screen will appear only when set in Master Boiler mode. This screen displays the cascade set point (maximum 190°F) on the top line. The system sensor value reading is on the second line. The control will cascade the boilers up to this set point depending on demand.
Press the ▼ key once.	
DHW SET 119 °F DHW 117 °F	This screen displays the domestic hot water temperature set point on the top line. The actual temperature measured by the tank or return line sensor (HTP 7250P-325) is displayed on the bottom line. If a mechanical aquastat is used in place of the recommended sensor, the second line will display 'OFF' in place of the temperature if the aquastat measures close to its set temperature, or 'ON' in place of the temperature if the aquastat temperature is too low.

Press the ▼ key once.	
OUTDOOR 11 °F FLUE 95 °F	The current outdoor temperature is displayed on the top line. If there is no outdoor sensor connected to the boiler, this line will display 'OFF' in place of the temperature. If the outdoor sensor is shorted, this line will display 'ON' in place of the temperature. The second line displays the current flue temperature of the boiler.
Press the ▼ key once.	
FLAME 0.0uA FAN SPEED 3497 RPM	This screen displays the boiler flame current on the top line. The second line displays the fan speed in the boiler.
Press the ▼ key once.	
0-10 V 0.0 V BOILER	The top line displays the voltage on the optional input. This voltage is only relevant if an external 0-10 volt signal is being used to control the boiler.
Press the ▼ key once.	
BUS COMM NO CONN	This display shows the status of the communication bus between multiple boilers. If the boiler is in a single boiler configuration, the display will show 'NO CONN'. If the boiler is used in a multiple coiler configuration, is the Master Boiler, and other boilers are connected to the communication bus and powered, this screen will show the address of each boiler connected to the bus.
Press the ▼ key once.	
POWER ON 0H CH ON 0H	The top line of this display indicates the amount of hours the boiler has had power applied to it over its life. The second line indicates how many hours the burner has been on for central heat demand over its life.
Press the ▼ key once.	
DHW ON GOOD IGNIT 1X	The top line of this display indicates the amount of hours the burner has been on for domestic hot water demand in the life of the boiler. The second line indicates how many times the burner has successfully ignited in the life of the boiler.
Press the ▼ key once.	
SYS CH ON 0h SYS DWH ON 0h	This screen displays how many hours the boiler has run to meet central heat and DWH demand.

Table 18 – Boiler Control Status Menu Screens

The following 10 screens display the last ten boiler lockout faults. The faults are displayed from most recent to oldest by pressing the ▼ key.

SCREEN	DESCRIPTION
Press the ▼ key once.	
FAULT HISTORY 1 07/27/2009 Mo 5:19A	This screen displays the last lockout fault the boiler controller had. The top line will alternate between the words 'FAULT HISTORY' and the actual fault encountered. The bottom line displays the date and time the fault occurred.
Press the ▼ key once.	
FAULT HISTORY 2 08/28/2009 Fr 5:19A	This screen displays the second oldest lockout fault that occurred in the boiler controller. The top line will alternate between the words 'FAULT HISTORY' and the actual fault encountered. The bottom line will display the date and time that the fault occurred.
Press the ▼ key once.	
FAULT HISTORY 3 08/28/2009 Fr 5:19A	This screen displays the third oldest lockout fault that occurred in the boiler controller. The top line will alternate between the words 'FAULT HISTORY' and the actual fault encountered if one has occurred. The bottom line displays the date and time a fault occurred.
Press the ▼ key once.	
FAULT HISTORY 4 08/28/2009 Fr 5:19A	This screen displays the fourth oldest lockout fault that occurred in the boiler controller. The top line will alternate between the words 'FAULT HISTORY' and the fault encountered. The bottom line displays the date and time the fault occurred.
Press the ▼ key once.	
FAULT HISTORY 5 08/28/2009 Fr 5:19A	This screen displays the fifth oldest lockout fault that occurred in the boiler controller. The top line will alternate between the words 'FAULT HISTORY' and the fault encountered. The bottom line displays the date and time the fault occurred.
Press the ▼ key once.	
FAULT HISTORY 6 08/28/2009 Fr 5:19A	This screen displays the sixth oldest lockout fault that occurred in the boiler controller. The top line will alternate between the words 'FAULT HISTORY' and the fault encountered. The bottom line displays the date and time the fault occurred.
Press the ▼ key once.	
FAULT HISTORY 7 08/28/2009 Fr 5:19A	This screen displays the seventh oldest lockout fault that occurred in the boiler controller. The top line will alternate between the words 'FAULT HISTORY' and the fault encountered. The bottom line displays the date and time the fault occurred.
Press the ▼ key once.	
FAULT HISTORY 8 08/28/2009 Fr 5:19A	This screen displays the eighth oldest lockout fault that occurred in the boiler controller. The top line will alternate between the words 'FAULT HISTORY' and the fault encountered. The bottom line displays the date and time the fault occurred.
Press the ▼ key once.	
FAULT HISTORY 9 08/28/2009 Fr 5:19A	This screen displays the ninth oldest lockout fault that occurred in the boiler controller. The top line will alternate between the words 'FAULT HISTORY' and the fault encountered. The bottom line displays the date and time the fault occurred.

Press the ▼ key once.	
FAULT HISTORY 10 08/28/2009 Fr 5:19A	This screen displays the tenth oldest lockout fault that occurred in the boiler controller. The top line will alternate between the words 'FAULT HISTORY' and the fault encountered. The bottom line displays the date and time the fault occurred.

Table 19 – Fault History Screens

B. BOTTOM BOILER (MASTER) MENU ONLY

This menu is accessed by pressing the ◀ key from the default menu or the ▶ key from the status menu.

SCREEN	DESCRIPTION
CASCADE MASTER READY SYS PUMP OFF	This screen tells the user that the boiler is configured as a Cascade Master Boiler and that the cascade system is ready to accept a demand for heat. The second line indicates the status of the system pump output of the cascade system. This screen will alternate with the default screen every 5 seconds or it can be accessed by pressing the ◀ key from the default screen.
CASCADE NO FOLLOWER SYS PUMP OFF	This screen is displayed when the boiler is configured as a Master Boiler and there are no connected follower boilers, or the follower boilers are not powered. The second line indicates status of the cascade system pump output. This screen will alternate with the default screen every 5 seconds or it can be accessed by pressing the ◀ key from the default screen.
CASCADE NO SENSOR SYS PUMP OFF	This screen is displayed when the boiler is configured as a Master Boiler and there is no system temperature sensor connected or the system sensor is defective. The cascade system will still function in this situation with reduced efficiency. All boilers will run simultaneously rather than in a staged fashion. The second line indicates the status of the system pump output of the cascade system. This screen will alternate with the default screen every 5 seconds or it can be accessed by pressing the ◀ key from the default screen.
CASCADE TT 0123 567 SYS PUMP ON 12:47P	Shows information about cascade status. The TT in the center of the top line shows that the cascade demand is coming from the TT contact being closed. You may also see DHW if the demand is from a DHW sensor, or 0-10 if the demand is from a 0-10 volt input. The following numbers show which boiler addresses are currently communicating to the master. If a boiler address is not used or communicating, the number will not show on the display. In the example above, boiler address #4 is not communicating. When a boiler in the system is firing, its address number will alternate with a '.' to signify it is firing. The bottom line shows the status of system pump output contacts.
Press the ▼ key once.	
CASCADE PWR 100% PRESENT 01234567	This screen shows the overall cascade power output. The range of this value is the number of boilers communicating with the Master x 100. For example, if 8 boilers are connected and communicating, the maximum cascade power is 800%. The second line shows which boiler addresses are communicating with the Master.
Press the ▼ key once.	
CASCADE SYST 118°F CASCADE SET 190°F	This screen shows the current system temperature sensor reading on the top line and the cascade system temperature setting on the bottom.
Press the ▼ key once.	
BOILER 0 100% BOILER 1 56%	This screen shows the current cascade power demand output on a per connected boiler basis for boilers addressed as 0 and 1. In the screen above, boiler 0 is being commanded to fire at 100% and boiler 1 at 56%. If this were a 2 boiler system, the 'CASCADE PWR' screen above would read 156%.
Press the ▼ key once.	
BOILER 2 0% BOILER 3 0%	This screen shows the current cascade power demand output on a per connected boiler basis for boilers addressed as 2 and 3.
Press the ▼ key once.	
BOILER 4 0% BOILER 5 0%	This screen shows the current cascade power demand output on a per connected boiler basis for boilers addressed as 4 and 5.
Press the ▼ key once.	
BOILER 6 0% BOILER 7 0%	This screen shows the current cascade power demand output on a per connected boiler basis for boilers addressed as 6 and 7.

Table 20 – Cascade Menu Screens

C. BOILER TEST MODE

This function is intended to simplify the gas adjustment. Listed in Table 20 are the recommended combustion settings for the gas type selected to run the boilers. Automatic modulation does not take place when the controller is in test mode. However, the boilers will modulate down if the program set point is reached while running in test mode. It is recommended you have the largest load possible to create a heat demand so the test mode operation will not be interrupted. To enter test mode, press the ▲ and **ENTER** keys simultaneously. To exit, press ▲ and ▼ simultaneously.

SERVICE RUN 3400 RPM
PUMP ON 4:49P

NOTE: The boiler will automatically exit test mode after 20 minutes of operation.

COMBUSTION SETTINGS ON ALL MODELS				
	Natural Gas		Propane LP	
Fan Speed	low	high	low	High
Carbon Monoxide (CO%)	0 – 20 ppm	70 – 135 ppm	0 – 20 ppm	80 – 150 ppm
Carbon Dioxide (CO_2%)	8 ½ - 9 ½%	8 ½ - 9 ½%	9 ½ - 10 ½%	9 ½ - 10 ½%

Table 21 – Combustion Settings on All Models

FAN SPEEDS			
MODEL	**IGNITION**	**MIN**	**MAX**
MOD CON 1000	3000	1950	7200
MOD CON 1700	3000	2200	6800

Table 22

PART 11 – SHUTDOWN

A. SHUTDOWN PROCEDURE

If the burner is not operating, disconnect the electrical supply.

If the burner is operating, lower the set point value to 70°F and wait for the burner to shut off. Continue to wait for the combustion blower to stop, so all latent combustion gases are purged from the system. This should take a maximum of 40 to 90 seconds.

B. VACATION PROCEDURE

If there is danger of freezing, change the set point to 70°F. DO NOT turn off electrical power. If there is no danger of freezing, follow “Shutdown Procedure”.

C. FAILURE TO OPERATE

Should the burner fail to light, the control will perform two more ignition trials prior to entering a lockout state. Note that each subsequent ignition trial will not occur immediately. After a failed ignition trial, the blower must run for approximately 10 seconds to purge the system. Therefore, a time period of approximately 40 to 90 seconds will expire between each ignition trial.

If the burner lights during any one of these three ignition trails, normal operation will resume. If the burner lights, but goes off in about 4 seconds, check the polarity of the wiring. See electrical connection section.

If the burner does not light after the third ignition trial, the control will enter a lockout state. This lockout state indicates that a problem exists with the boiler, the controls, or the gas supply. Under such circumstances, a qualified service technician should be contacted immediately to properly service the boiler and correct the problem. If a technician is not available, depressing and holding the RESET button for more than 1 second will remove the lockout state so additional trials for ignition can be performed. The unit will try to re-light once every 6 minutes.

PART 12 – TROUBLESHOOTING

A. BOILER ERROR CODE

If any of the sensors detect an abnormal condition, or an internal component fails during the operation of the boiler, the display may show an error message and error code. This message and code may be the result of a temporary condition, in which case the display will revert to its normal readout when the condition is corrected, or it may be a condition that the controller has evaluated as not safe to restart the boiler. In this case, the boiler control will be locked out, the red FAULT light will be lit, and the message “LOCKOUT” will be displayed on the readout on the lower line.

The Boiler will not start until a qualified technician has repaired the boiler and pressed the RESET button for more than 1 second. If there is an error message displayed on the readout, and the message “LOCKOUT” is not displayed and the FAULT light is not lit, then the message is the result of a temporary condition and will disappear when the problem corrects itself.

IMPORTANT NOTE: If you see error messages on your display readout, call a technician immediately, since the message may indicate a more serious problem will occur soon.

B. BOILER ERROR

When an error condition occurs, the controller will display a description and code on the display readout. These error messages and their recommended corrective actions are described in Section D.

C. BOILER FAULT

1. When a fault condition occurs, the controller will illuminate the red “FAULT” indication light and display a fault message in the screen. The alarm output will also activate. Most fault conditions cause the CH pump to run in an attempt to cool the boiler.

2. Note the fault message displayed and refer to Part D in this section for an explanation of the message along with several suggestions for corrective actions.

3. Press the reset key to clear the fault and resume operation. Be sure to observe the operation of the boiler for a period of time to assure correct operation and no reoccurrence of fault message.

⚠ WARNING

When servicing or replacing any components of this boiler, be certain that:

- The gas is off.
- All electrical power is disconnected.

⚠ DANGER

When servicing or replacing components that are in direct contact with boiler water, be certain that:

- There is no pressure in the boiler. (Pull the release on the relief valve. Do not depend on the pressure gauge reading.
- The boiler water is not hot.
- The electrical power is disconnected.

⚠ WARNING

DO NOT USE THIS BOILER IF ANY PART HAS BEEN SUBMERGED IN WATER. Immediately call a qualified service technician. The boiler MUST BE replaced if it has been submerged. Attempting to operate a boiler that has been submerged could create numerous harmful conditions, such as a potential gas leakage causing a fire and/or explosion, or the release of mold, bacteria, or other harmful particulates into the air. Operating a previously submerged boiler could result in property damage, severe personal injury, or death.

NOTE: Boiler damage due to flood or submersion is considered an Act of God, and IS NOT covered under product warranty.

⚠ CAUTION

Observe the position of each wire and label before removing. Wiring errors may cause improper and dangerous operation. Verify proper operation after servicing.

⚠ CAUTION

If overheating occurs, or the gas supply fails to shut off, do not turn off electrical power to the circulating pump. This may aggravate the problem and increase the likelihood of boiler damage. Instead, shut off the gas supply to the boiler at the gas service valve.

NOTE: If system return temperatures are maintained below the dew point, condensation will form on the inside of the boiler cabinet and cause some internal sheet metal components to rust.

D. USER INTERFACE DISPLAY

Cascade Control FAULT Codes

SCREEN	DESCRIPTION	POSSIBLE REMEDY
Fault Code EO3 **System Sensor Failure**		
SYS SUPPLY SENSOR PUMP OFF E03	This screen shows that there is a problem with the system sensor circuit. The circuit could be open or shorted. Possible reasons for this error are: There is no system sensor connected to the Master Boiler. The system sensor is faulty. There is a short circuit in the system sensor wiring; possibly from a staple placed through the wire, or damage to the wire causing both conductors to touch. The system sensor wiring is open due to defect or damage.	Disconnect the system sensor from the wiring and measure the resistance of it. Compare the measured resistance to the table in this manual to see if it corresponds to the temperature of the sensor. If the resistance does not agree with the sensor, replace the sensor. If the sensor is OK, disconnect the sensor wiring from both the boiler and the sensor and check continuity using an ohmmeter. Repair or replace as necessary. If this error is present, all boilers in the cascaded group will run and ignite simultaneously when there is a heat demand. Each boiler will modulate to maintain set point temperature on its own supply sensor. This code will reset automatically when repair is complete. This code will not display if system setting function ERROR SYSTEM SENS is set to OFF.

Fault Code TT **Temperature Blocking TT Demand**		
TEMPER BLOCKING PUMP ON TT	This screen indicates a temporary hold on the burner. There is a demand on the boiler, the pump is powered on, but the temperature of the water at the supply sensor is too high for the boiler to ignite. This occurs because the water temperature measured by the supply sensor is higher than the boiler temperature – ignition diff setting. This error will clear itself when the water temperature measured by the supply sensor is less than the boiler temperature – ignition diff setting.	
Fault Code DHW **Temperature Blocking DHW Demand**		
TEMPER BLOCKING PUMP ON DHW	This display indicates a temporary hold on the burner. There is a demand on the boiler from the DHW circuit for heat, the pump is powered on, but the boiler supply sensor indicates that the water temperature is too high to ignite. This is a temporary hold on the burner only and all other functions will remain functioning properly. This error will clear itself when either the boiler supply temperature drops below the BOILER SUPPLY minus boiler supply differential (5°F) or DHW SETPOINT is satisfied and no longer calls for heat.	
Fault Code PRO		
LOW WATER PRESS PUMP OFF PRO	This display indicates that there is low water pressure in the boiler. This code will reset automatically after the water pressure is high enough for the boiler to run safely. The second line indicates the status of the pump. Note that while the water pressure is low, the pump will be off.	1. Assure that the system pressure is above 10 psig. 2. Check for leaks in the system piping.
Fault Code FLU		
HIGH FLUE PRESS FLU PUMP ON	This display indicates that there is excessive flue pressure. This code resets automatically after the high pressure condition is resolved. The second line indicates the status of the pump.	1. Assure that the flue is not blocked. 2. Check the switch wiring by applying a jumper in place of the switch. If the code clears with the jumper in place, REPLACE the flue switch and connect the wires to the new switch BEFORE running boiler.
WARNING: Do not use jumper to remedy an FLU error. Faulty switch MUST be replaced. Failure to do so could result in serious injury or death.		
Fault Code LOU		
24 VOLT LOW LOU PUMP ON	This display indicates that the 24 volt power supply on the control is damaged or overloaded. This code resets automatically if it is the result of an overload and that overload condition is removed. The second line indicates the status of the pump. Note that while 24 volt power is low, the pump output will be on.	1. Check line voltage. It must be between 100 and 128 volts. 2. If available, connect PC, and using HTP service software check the 24v supply display in the lower left corner of the screen. The number displayed here must be greater than 128 and should be no greater than 250. Use this as a troubleshooting guide as you follow the steps below. 3. Remove the 10 pin Molex connector from customer connection board. If the message clears, then the problem is with the external sensor wiring. Examine the external sensor wiring for shorts to the ground, repairing as necessary. If the message is still present and the boiler is so equipped, disconnect the UL 353 low water cut-off to see if the message clears. Replace the faulty part. Check the low voltage wire harness in boiler for shorts to ground. 4. If a message only occurs when the burner tries to light, check the gas valve for excessive current draw. 5. If a message is present with the low voltage harness disconnected from the 926 control board, replace the 926 control board.
Fault Code F00		
WATER HIGH TEMP F00 PUMP ON	This display indicates if the water in the boiler has overheated. This code indicates a serious safety issue and the boiler will not restart until it cools sufficiently and a technician repairs the cause of overheating and pushes the RESET button on the display. This is a serious situation and is indicated by the red light on the display illuminating and the word LOCKOUT flashing on the display. During this lockout fault, the pump will be on as indicated on the second line in an effort to cool the boiler down.	1. Check circulator pump operation 2. If the circulator pump is running, be sure that there is water in the system and that the water is moving through the system as intended. Be sure that all correct ball valves and or zone valves are open or closed as intended. 3. Observe the temperature/pressure gauge. If the water is not too hot and this message is displayed, check the wiring to the water ECO sensor and repair if necessary. If the wiring is ok and this code is still present and the water is not excessively hot, replace the ECO sensor.
SCREEN	**DESCRIPTION**	**POSSIBLE REMEDY**
Fault Code F01		
FLUE TEMP/WAT LV F01 PUMP ON	This display indicates that the flue temperature limit switch of the boiler has tripped or that the water level in the boiler is low (this will only occur if the optional UL353 LWCO is installed). This code indicates a serious safety issue. The boiler will not restart until the flue cools down sufficiently or the water level is restored. A technician must repair the cause of the problem and push the RESET button first on the low water cut-off control box, then on the display. This situation is indicated by the red light on the display and the word LOCKOUT flashing on the display. During this lockout fault, the pump will be on as indicated on the second line of the display.	1. If the boiler has a UL353 LWCO, check if the red LED on the LWCO control box is illuminated. If so, correct the low water condition and press the reset button on the LWCO control box to reset the LWCO. The LED should change to green. Press the reset button on the front panel of the boiler to reset the boiler control. 2. Check the flue for obstructions or any sign of damage, especially signs of excessive heat. Repair as necessary. Push the red reset button on the flue temperature switch located on the flue inside the rear access door of the boiler. NOTE: The switch temperature must be less than 90°F to reset. Press the reset button on the display. Run the boiler and check the flue temperature by using both an external thermometer in the flue pipe and the flue temperature display in the status screens. If the flue temperature is within specs and the switch trips, replace the switch. If the flue temperature is excessive, check and adjust combustion controls on the boiler. If the problem persists, inspect the target wall in the combustion chamber and replace it if cracked or damaged.

Fault Code F02		
SUPPLY SENSOR F02 PUMP ON	Indicates that the supply temperature sensor of the boiler has failed. This is a serious safety issue and the boiler will not restart until the sensor is replaced by a technician and he pushes the RESET button on the display. This situation is indicated by the red light on the display and the flashing word LOCKOUT. During this lockout fault, the pump will be on as indicated on the second line of the display.	1. Check the electrical connection to the thermistor on the outlet manifold. Verify 5 VDC by checking in Molex connector. If there is no 5 VDC, check the harness. If harness is OK, replace control. NOTE: The boiler will reset automatically. Verify thermistor values by referencing chart in this manual. 2. Replace thermistor if necessary.
Fault Code F03		
RETURN SENSOR F03 PUMP ON	This display indicates that the return temperature sensor of the boiler has failed. This code indicates a serious safety issue and the boiler will not restart until the sensor is replaced by a technician and he pushes the RESET button on the display. This situation is indicated by the red light on the display and the word LOCKOUT flashing on the display. During this lockout fault, the pump will be on as indicated on the second line of the display.	1. Check circulator pump operation. 2. Assure that there is adequate flow through the boiler by accessing the status menu and assuring that there is less than a 50°F rise from the return thermistor to the supply thermistor. 3. Troubleshoot thermistor by following steps in F02.
Fault Code F04		
FLUE SENSOR F04 PUMP ON	This display indicates that the flue temperature sensor of the boiler has failed. This is a serious safety issue. The boiler will not restart until the sensor is replaced by a technician and he pushes the RESET button on the display. This situation is indicated by the red light and the flashing word LOCKOUT on the display. During this lockout fault, the pump will be on as indicated on the second line of the display.	Inspect the flue sensor for physical damage or corrosion and replace it if necessary. Check the electrical connection to the flue sensor and repair as necessary. Measure the resistance of the sensor and refer to the Supply Temperature Sensor chart in Figure 28 of this manual. The temperature on the chart should be close to the same as the temperature in the flue. If not, replace the flue sensor.
Fault Code F05		
SUPPLY TEMP HIGH F05 PUMP ON	This display indicates that the supply temperature of the boiler is excessive. If accompanied by the red FAULT light and LOCKOUT flashing on the display, this code indicates that the temperature on the supply sensor has exceeded 230°F and a serious safety issue exists. The boiler will not restart until the cause of the excessive temperature is repaired by a technician and the RESET button is pushed on the display. If the FAULT light is not illuminated and this message is displayed, then the supply temperature of the boiler is at or above 210°F. The message will clear automatically when the temperature drops below 194°F. During the time that this message or lockout fault is displayed, the pump will be on as indicated on the second line.	1. Check circulator pump operation. 2. Assure that there is adequate flow through the boiler by accessing the status menu and assuring that there is less than a 50°F rise from the return thermistor to the supply thermistor. 3. Check the direction of flow off the boiler circulator. (See Piping Details in this manual.) 4. Troubleshoot the thermistor by following steps in F02.
Fault Code F06		
RETURN TEMP HIGH F06 PUMP ON	This display indicates that the return temperature of the boiler is excessive. If accompanied by the red FAULT light and LOCKOUT flashing on the display, the return sensor temperature has exceeded 230°F and a serious safety issue exists. The boiler will not restart until the cause of excessive temperature is repaired by a technician and the boiler is RESET. If the red FAULT light is not illuminated, then the return temperature of the boiler is at or above 210°F. The message will clear automatically when the temperature drops below 194° F. During the time that this message or lockout fault is displayed, the pump will be on as indicated on the second line.	1. Check circulator pump operation. 2. Assure that there is adequate flow through the boiler by accessing the status menu and assuring that there is less than a 50°F rise from the return thermistor to the supply thermistor. 3. Check the direction of flow on boiler circulator. (See Piping Details in this manual.) 4. Troubleshoot thermistor by following steps in F02.
Fault Code F09		
NO FLAME ON IGN F09 PUMP ON	The boiler tried to ignite four times during one heat call and failed. The red FAULT light and LOCKOUT will flash on the display. This code indicates a serious safety issue. The boiler will not restart until the cause of ignition failure is repaired by a technician and he pushes the RESET button on the display. During this lockout fault, the pump will remain on as indicated on the second line of the display.	1. Watch the igniter through the observation window provided. 2. If there is no spark, check the spark electrode for the proper .156” (3.96 mm) gap (See Figure 28). 3. Remove any corrosion from the spark electrode and flame rectifier probe. 4. If there is a spark but no flame, check the gas supply to the boiler. 5. If there is a flame, check the flame sensor. 6. Check any flue blockage or condensate blocks.

Fault Code F10		
FLAME LOSS F10	The flame was lost while the boiler was firing 3 times during 1 demand call. The red light will display and the word LOCKOUT will flash. This code indicates a serious safety issue. The boiler will not restart until the cause of flame loss is determined by a technician and he pushes the RESET button on the display. During this lockout fault, the pump will be on as indicated on the second line of the display.	1. Monitor the gas pressure to the boiler while in operation. 2. Assure that the flame is stable when lit. 3. Check to see if the display readout changes from “GAS VALVE ON” to “RUN” within a few seconds after the boiler ignites. 4. Check the FLAME signal on the status display. It should be above 1.0 when the boiler is firing. 5. If the signal reads less than 1 microampere, clean the flame rectifier and spark probe. 6. If the problem persists and the ‘FLAME” signal is still less than 1.0, replace the flame probe and spark igniter probe. 7. The flame signal should be steady after the boiler has been firing for 1 minute and is normally at 5.0 to 9.0. If the flame signal is not steady, disassemble the burner door and check the burner and its sealing gaskets.
Fault Code F11		
FALSE FLAME SIG F11 PUMP ON	There is flame when the control is not telling the boiler to run. The red light will display and the word LOCKOUT will flash. This code indicates a serious safety issue. The boiler will not restart until the cause is determined by a technician and he pushes the RESET button on the display. During this lockout fault, the pump will be on as indicated on the second line of the display.	1. Look into window. If there is flame, turn the gas off to the boiler at the service valve and replace the gas valve. 2. If the flame signal on the status menu is greater than 1.0 when the burner is not lit, replace the spark igniter and the flame rectification probe. 3. If the flame return sensor is not present after turning off the gas supply, check the gas valve electrical connection. 4. Repair condensate system as necessary. If condensate has backed up and partially filled the combustion chamber, the refractory wall may be damaged and should be replaced. 5. Turn the gas on at the service valve after corrective action is taken. 6. If the refractory wall falls against the rectifier probe, it may conduct the signal to ground, giving a false reading.
Fault Code F13		
FAN SPEED ERROR F13 PUMP ON	The fan is not running at the speed that the control has commanded it to run at. The fan speed had been more than 30% faster or slower than the commanded speed for more than 10 seconds. The red light will display and the word LOCKOUT will flash. This code indicates a serious safety issue and the boiler will not restart until the cause is determined by a technician and he pushes the RESET button on the display. During this lockout fault, the pump will be on as indicated on the second line.	1. Check the combustion air fan wiring. 2. Measure the DC voltage from the red fan wire to ground while it is connected to the fan. It should be between 24 to 40 volts. If it is lower than 24 volts, check for excessive external loads connected to the boiler sensor terminals. Disconnect the 5 pin plug from the fan and check the voltage on the red wire again. If it is now between 24-40 volts, replace the fan. If it is still below 24 volts replace the boiler control board.
Fault Code F15		
APS OPEN F15	Flapper valve feedback stuck open.	1. Check flue system for obstructions. 2. Check proper communication between boilers. 3. Check operation of flapper valve. 4. Check wiring between valve and controller. 5. Replace valve-flapper.
Fault Code F16		
APS CLOSED F16	Flapper valve stuck closed.	1. Check flue system for obstructions. 2. Check proper communication between boilers. 3. Check operation of flapper valve. 4. Check wiring between valve and controller. 5. Replace valve-flapper.
Fault Code F20		
CONDENSATE FULL F20 PUMP ON	The condensate trap is full. The red light will display and the word LOCKOUT will flash. This code indicates a serious safety issue. The boiler will not restart until the cause is determined by a technician and he pushes the RESET button on the display. During this lockout fault, the pump will be off as indicated on the second line of the display.	1. Check condensate lines for obstructions. 2. Check wiring from condensate reservoir to 926 control. Verify the leads are green and red. Repair as necessary.
Fault Code F31		
PROGRAM ERROR F31	There was an error while programming the control and the memory is corrupt. The boiler control will not function in this state and the pump will be off as indicated on the bottom line. This error only occurs if a technician is programming the control and the programming function fails. The only way to recover from this error is to reprogram the control. If this error occurs at any time other than when a technician is servicing the boiler, the control has failed and must be replaced by a qualified technician	The control must be re-programmed. If programming does not solve problem, the control must be replaced.

Fault Code PP		
CONTROL PROGRAMED PP	The control has been programmed by a technician or the factory. After programming, the control is left in a locked out mode. Press the RESET key for at least 1 second to begin use of the control.	
The following blocking codes will block operation until the control determines the situation safe for boiler operation.		
Blocking Code E07		
FLUE TEMP HIGH E07 PUMP OFF TIME	This display indicates that the flue sensor temperature is excessive and above 210°F. When this code is displayed, the boiler will not respond to a demand for heat. When the flue temperature decreases below 194°F, the display will return to normal and allow the boiler to respond to a heat demand. The bottom line indicates the status of the pump. The pump will remain off when this error is displayed.	Check the flue for obstructions or any sign of damage, especially signs of excessive heat. Repair as necessary. Run the boiler and check the flue temperature with an external thermometer. If the flue temperature on the thermometer does not agree with the flue temperature displayed in the status menu, inspect the wiring to the flue temperature sensor in the boiler and repair as necessary. If the wiring is intact, replace the flue sensor. If the flue temperature is excessive on the status menu and the test thermometer reads the same, check and adjust combustion controls on the boiler. If the problem persists, inspect the target wall in the combustion chamber and replace it if cracked or damaged.
Blocking Code E16		
COMMON FLUE BLOCK E16	Common flue blocking or flapper valve feedback failure.	1. Check flue system for obstructions. 2. Check proper communication between boilers. 3. Check operation of flapper valve. 4. Check wiring between valve and controller. 5. Replace valve-flapper.
Blocking Code E19		
LINE VOLTAGE PUMP OFF E19	This display indicates that the line voltage frequency is out of range. This could happen if the boiler is being powered from a small gasoline powered generator that is not functioning correctly or overloaded.	Inspect power wiring to boiler and repair as necessary. If connected to line voltage, notify the power company. If connected to an alternate power source such as generator or inverter, make sure the line voltage frequency supplied by the device is 60 Hz.

Table 23 – Fault and Blocking Code Screens

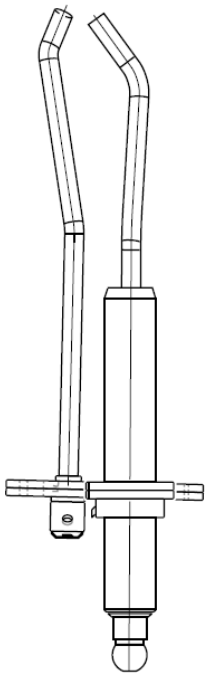

NOTE: If receiving an F09 fault code, check the gap spacing between points on the electrode by holding two quarters together and sliding them through the gap. There should be a slight resistance.

Resistance Tables

Outdoor Sensor (7250P-319)	
Outside Temperature (°F)	Resistance (ohms)
–22	171800
–13	129800
–4	98930
5	76020
14	58880
23	45950
32	36130
41	28600
50	22800
59	18300
68	14770
77	12000
86	9804
95	8054
104	6652
113	5522

System/Pipe Sensor 7250P-324	
Boiler Sensor (7250P-667)	Indirect Tank Sensor (7250P-325)
Water Temperature (°F)	Resistance (ohms)
32	32550
41	25340
50	19870
59	15700
68	12490
77	10000
86	8059
95	6535
104	5330
113	4372
122	3605
131	2989
140	2490
149	2084
158	1753
167	1481
176	1256
185	1070
194	915
203	786
212	667

Figure 28

PART 13 – MAINTENANCE

CAUTION

In unusually dirty or dusty conditions, care must be taken to keep appliance cabinet door in place at all times. Failure to do so VOIDS WARRANTY!

⚠ WARNING

Allowing the appliance to operate with a dirty combustion chamber will hurt operation. Failure to clean the heat exchanger as needed by the installation location could result in appliance failure, property damage, personal injury, or death. Such product failures ARE NOT covered under warranty.

The appliance requires minimal periodic maintenance under normal conditions. However, in unusually dirty or dusty conditions, periodic vacuuming of the cover to maintain visibility of the display and indicators is recommended.

A. MAINTENANCE PROCEDURES

Periodic maintenance should be performed once a year by a qualified service technician to assure that all equipment is operating safely and efficiently. The owner should make necessary arrangements with a qualified heating contractor for periodic maintenance of the heater. Installer must also inform the owner that the lack of proper care and maintenance of the heater may result in a hazardous condition.

⚠ WARNING

BEFORE EACH HEATING SEASON a trained and qualified service technician should perform the inspections as per the boiler inspection and maintenance schedule in the back of this manual. Failure to do so could result in death or serious injury.

⚠ WARNING

The combustion chamber insulation in this product contains ceramic fiber material. Ceramic fibers can be converted to cristobalite in very high temperature applications. The International Agency for Research on Cancer (IARC) has concluded, "Crystalline silica inhaled in the form of quartz or cristobalite from occupational sources is carcinogenic to humans (Group 1)."

- **Avoid breathing dust and contact with skin and eyes.**
- **Use NIOSH certified dust respirator (N95). This type of respirator is based on the OSHA requirements for cristobalite at the time this document was written. Other types of respirators may be needed depending on job site conditions. Current NIOSH recommendations can be found on the NIOSH website: http://www.cdc.gov/niosh/homepage.html. NIOSH approved respirators, manufacturers, and phone numbers are also listed on this website.**
- **Wear long-sleeved, loose fitting clothing, gloves, and eye protection.**
- **Apply enough water to the combustion chamber lining to prevent dust.**
- **Wash potentially contaminated clothes separately from other clothing. Rinse clothes washer thoroughly.**

NIOSH stated First Aid.

- **Eye: Irrigate immediately.**
- **Breathing: Fresh air.**

B. COMBUSTION CHAMBER COIL CLEANING INSTRUCTIONS FOR HEATER

*Before beginning this procedure, you must have on hand the following items:

- a nylon, stainless steel, or brass brush (not steel)
- lime scale removing solution, approved for use with stainless steel
- gloves and eye protection

1. Shut down the boiler by using the following steps:
   a. Close the gas valve, shut down the unit, and wait for the unit to be cool to the touch.
   b. Disconnect the condensate piping from the outside connection, (not from the boiler side), so flow from condensate reservoir can be observed.
   c. Disconnect electrical connections from the gas valve, spark electrode and flame rectification probe and combustion blower.
   d. Remove the (4) screws on the aluminum ¾" NPT connector on the right side of the gas valve.
   e. Disconnect the wiring connected to the combustion blower motor.
   f. Remove the (6) 10MM nuts from the burner plate assembly.

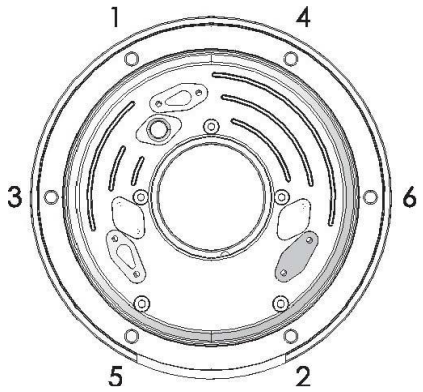

Figure 29

g. Pull the entire burner plate assembly with blower still attached towards you, while removing or pushing aside any wiring to allow the removal of the assembly.

2. Using a spray bottle filled with lime remover, spray liberally on the coils, making sure the solution penetrates and funnels down through the condensate system. If the condensate system is blocked, let chemical penetrate for at least 15 minutes, or until condensate drains.

3. Use the nylon, stainless steel or brass brush (do not use steel) and scrub coils to remove any buildup. Then vacuum the debris from the coils.

4. Spray the coils with clear water, making sure to confine the spray to the area being cleaned (Try to avoid getting the back ceramic wall of the unit wet). Flush the combustion chamber with fresh water until it runs clear from the condensate. At this point, the boiler should be ready to be re-assembled.

a. Inspect gaskets.
b. Re-install the burner assembly.
c. Replace and tighten the (6) 10 mm nuts to the burner plate using staggered tightening sequence (see detail).
d. Re-connect all wiring connections.
e. Inspect the gas valve to assure the O-ring is in place.
f. Replace the (4) screws on the aluminum connector on the gas valve. Turn the gas back on. **(IMPORTANT: CHECK FOR GAS LEAKS BEFORE TURNING THE APPLIANCE ON!)**
g. Turn the boiler power back on and create a demand on the boiler. When boiler is lit, observe condensate flow from the boiler. Be sure the boiler is operating properly.
h. Re-connect the condensate piping to the outside condensate connection.

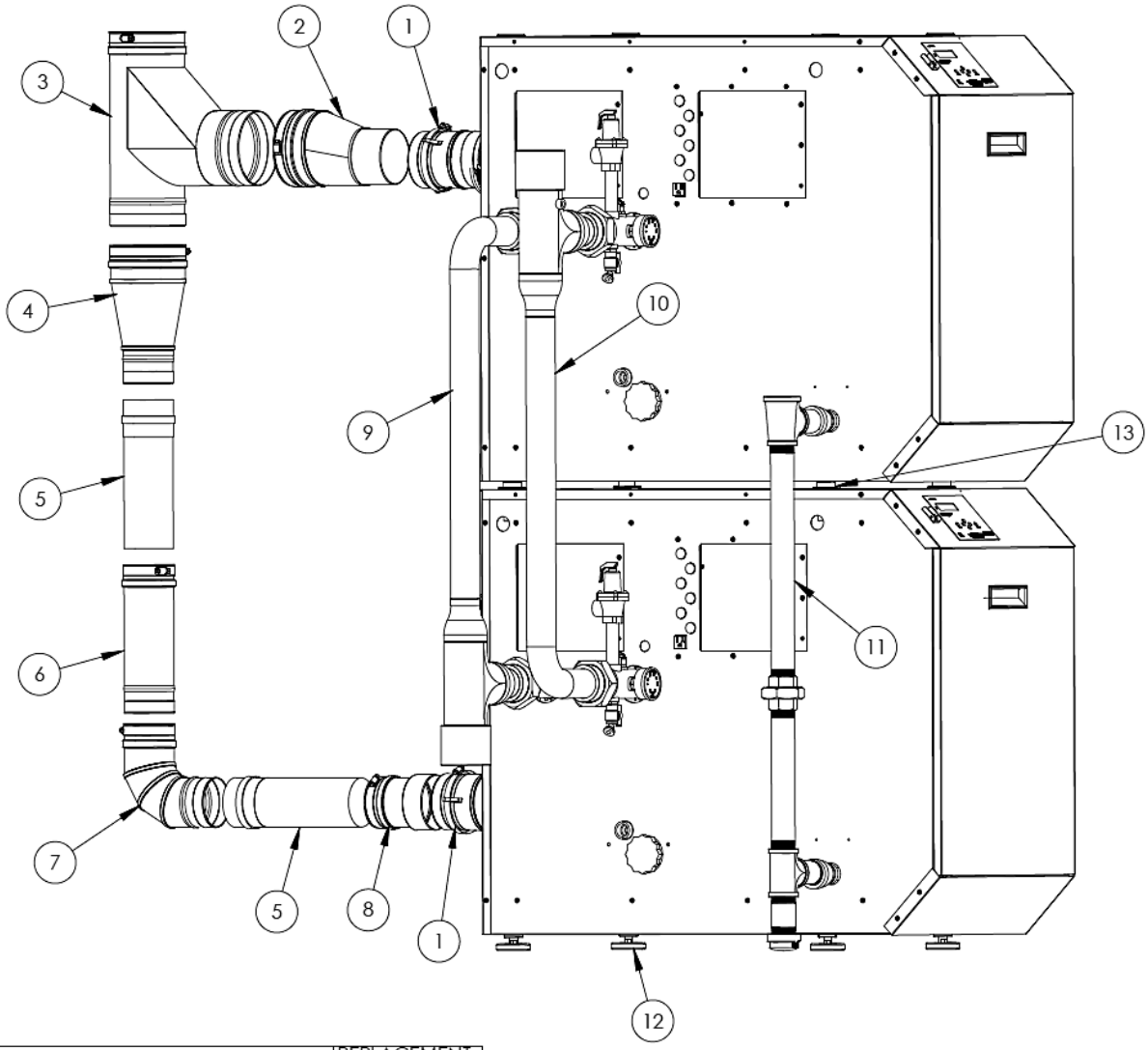

ITEM #	DESCRIPTION	REPLACEMENT PART#
1	ADAPTER, OFFSET, 2 DEGREE S.S.	7350P-328
2	ECCENTRIC, FEMALE, 2 DEGREE, S.S.	7350P-336
3	TEE, BOOT, EXHAUST, S.S.	7350P-335
4	TAPERED INCREASER, S.S.	7350P-334
5	CUSTOM PIECE, 12" LONG, S.S.	7350P-330
6	VENT LENGTH, S.S.	7350P-332
7	ELBOW, 88 DEGREE, S.S.	7350P-331
8	ADAPTER, FNS, S.S.	7350P-329
9	RETURN MANIFOLD	7350P-376
10	SUPPLY MANIFOLD	7350P-377
11	ASSY GAS PIPING	7350P-744
12	LEVELING FOOT/MOUNT SUPPORT	7350P-317
13	STACKING ASSEMBLY	7350P-616
14	SYSTEM TEMP SENSOR KIT (NOT SHOWN)	7350P-747
15	CAT 5 CALBE (NOT SHOWN)	7350P-745

LP-428-A
05/03/13

Figure 30 – MOD CON 1000 External Parts Blowout

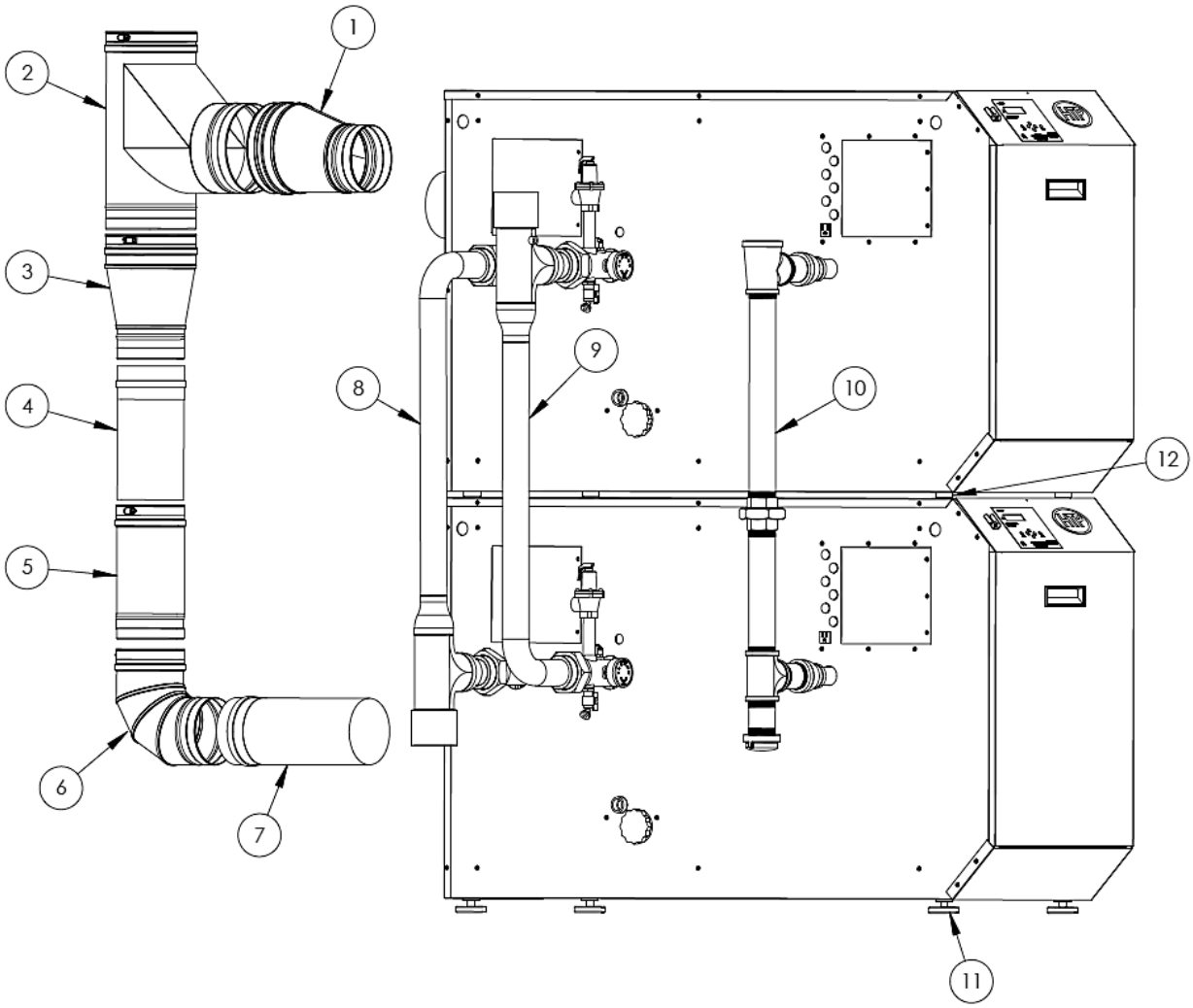

ITEM#	DESCRIPTION	REPLACEMENT PART #
1	INCREASER, ECCENTRIC S.S.	7350P-344
2	BOOT TEE, S.S.	7350P-343
3	TAPERED INCREASER, S.S.	7350P-342
4	CUSTOM LENGTH, 12", S.S.	7350P-341
5	VENT LENGTH, 12" S.S.	7350P-340
6	ELBOW, 90 DEGREE, S.S.	7350P-339
7	CUSTOM LENGTH, 15", S.S.	7350P-338
8	RETURN MANIFOLD	7350P-376
9	SUPPLY MANIFOLD	7350P-377
10	ASSY GAS PIPING	7350P-743
11	LEVELING FOOT/MOUNT SUPPORT	7350P-317
12	STACKING ASSEMBLY	7350P-616
13	SYSTEM TEMP SENSOR KIT (NOT SHOWN)	7350P-747
14	CAT 5 CABLE (NOT SHOWN)	7350P-745

LP-428-B
05/03/13

Figure 31 – MOD CON 1700 External Parts Blowout

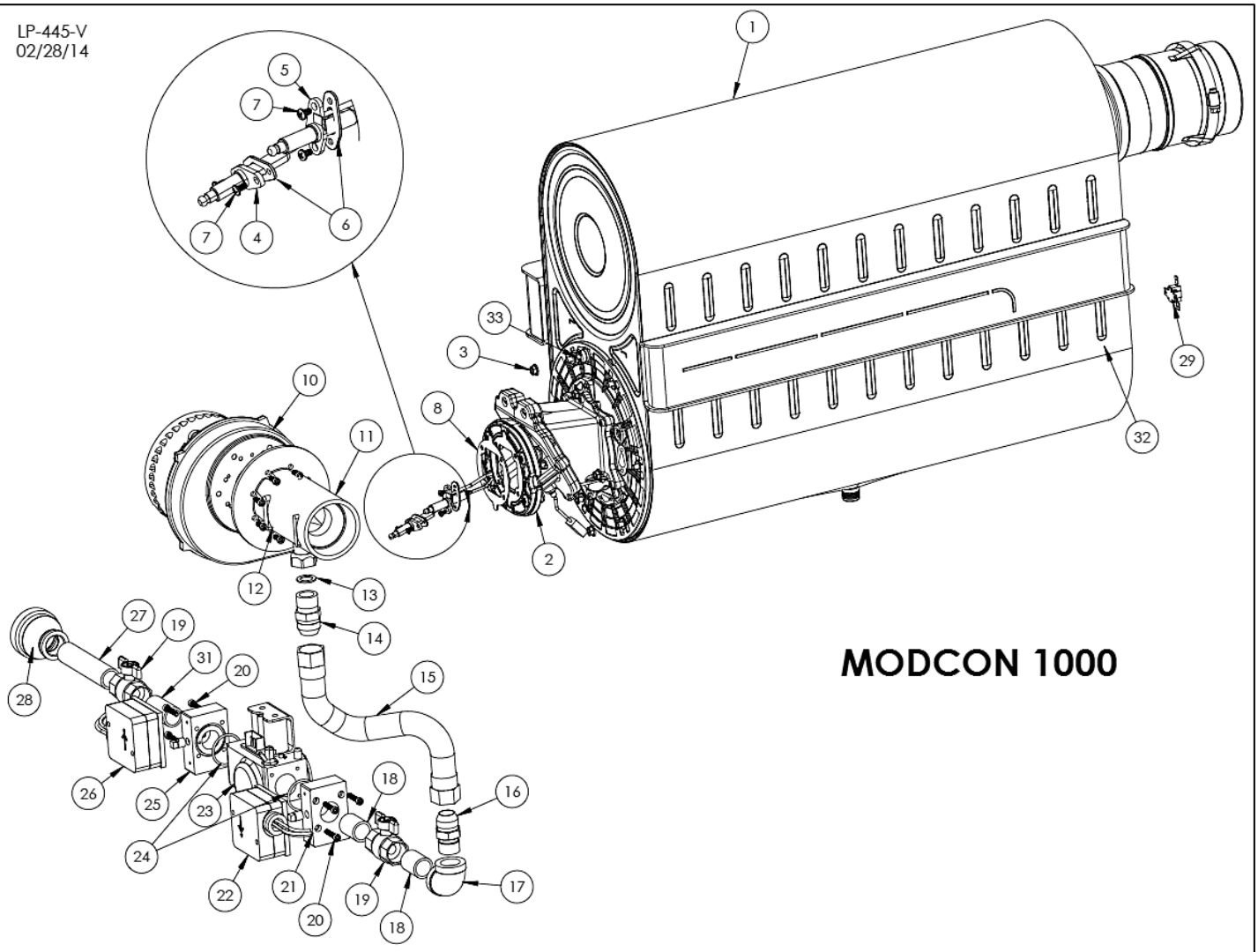

Item #	Replacement Part #	Description
1	7350P-006	500,000 BTU MODCON MODULE
2	7350P-442	BURNER ASSEMBLY (BURNER DOOR, FLAPPER VALVE, BURNER, BURNER GASKET)
3	7500P-067	M6 NUT - BURNER DOOR
4	7350P-023	FLAME RECTIFICATION PROBE (w/GASKET)
5	7350P-266	SPARK ELECTRODE (w/GASKET)
6	7250P-005	GASKET - PROBE/ELECTRODE
7	7250P-069	M4 X 8MM S.S. SCREW - PROBES
8	7350P-274	GASKET - BLOWER TO FLAPPER VALVE
9	7250P-206	M5 X 12MM ALLEN CAP SCREW - BLOWER (NOT SHOWN)
10	7350P-159	COMBUSTION BLOWER
11	7350P-630	AIR/GAS MIXER ASSEMBLY
12	7250P-478	M5 X 12MM ALLEN CAP SCREW- AIR/GAS MIXER
13	7450P-115	WASHER - AIR/GAS MIXER
14	7450P-138	3/4 FLARE X 3/4 BSPP FITTING
15	7600P-152	3/4 FLARE FLEX HOSE
16	7450P-143	3/4 FLARE X 3/4 NPT ADAPTER

Item #	Replacement Part #	Description
17	7350P-083	3/4 NPT ELBOW
18	7350P-101	3/4 NPT X CLOSE NIPPLE - ZINC PHOSPHATE COATED
19	7350P-079	3/4 GAS BALL VALVE
20	7250P-061	M5 X 25MM S.S. SOCKET CAP SCREW - SWITCH BLOCK
21	7350P-075	GAS PRESSURE SWITCH BLOCK (LEFT)
22	7350P-035	HIGH PRESSURE GAS SWITCH w/O-RING (OPTIONAL)
23	7350P-033	GAS VALVE
24	7350P-077	SILICONE O-RING #127 - SWITCH BLOCK
25	7350P-076	GAS PRESSURE SWITCH BLOCK (RIGHT)
26	7350P-036	LOW PRESSURE GAS SWITCH w/O-RING (OPTIONAL)
27	7350P-081	3/4 X 4-1/2" NIPPLE - ZINC PHOSPHATE COATED
28	7350P-110	3/4" X 1-1/2" NPT REDUCING COUPLING BLACK IRON
29	7350P-626	THERMAL FUSE
30	7350P-078	1/8-27 NPT PLUG - SWITCH BLOCK
31	7350P-102	2" NPT NIPPLE
32	7250P-162	CERAMIC REFRACTORY (LOCATED INSIDE END OF MODULE)
33	7450P-085	TEMPERATURE LIMIT SWITCH

Figure 32

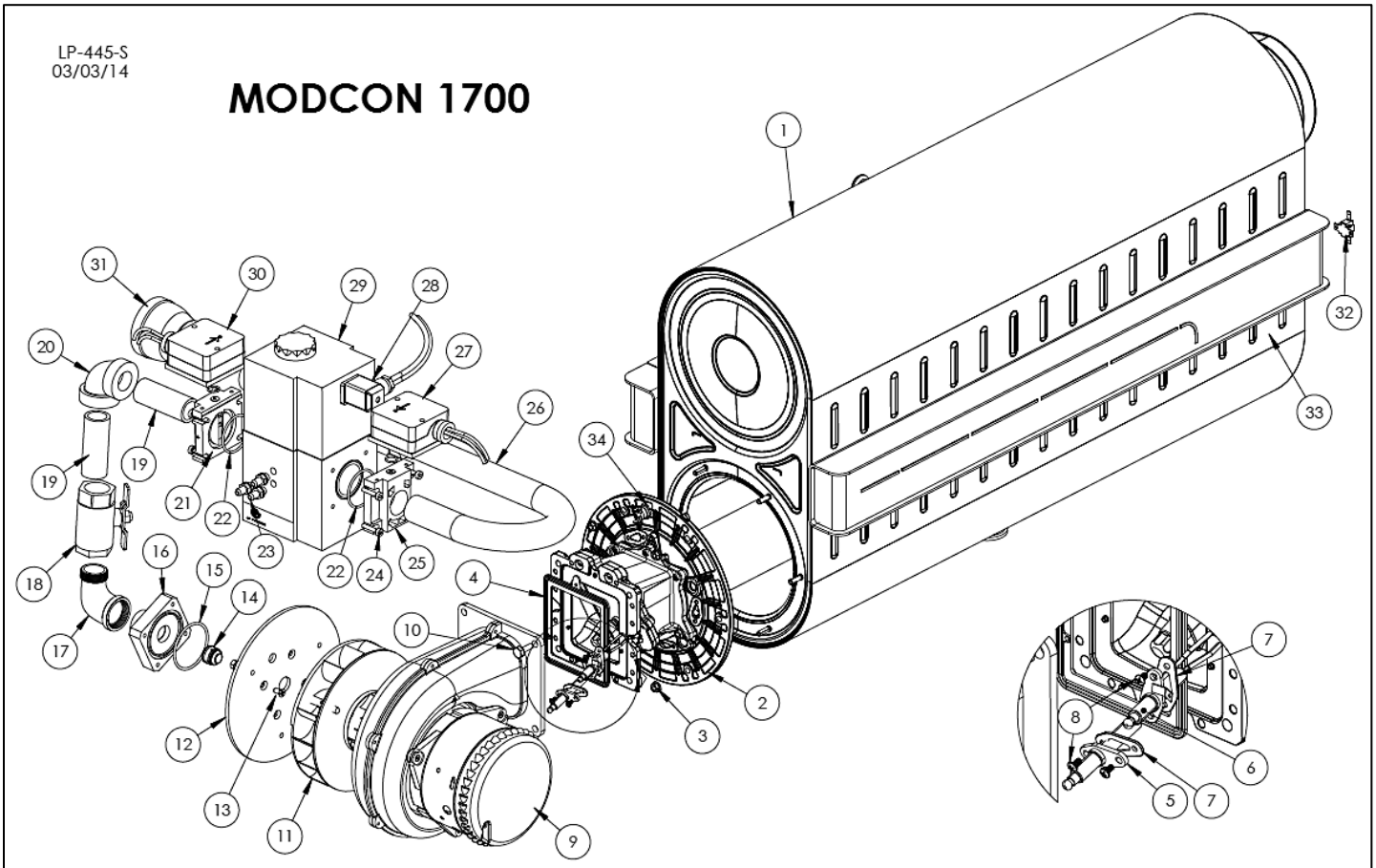

Item #	Replacement Part #	Description
1	7350P-007	850,000 BTU MODCON MODULE
2	7350P-443	BURNER ASSEMBLY (BURNER DOOR, FLAPPER VALVE, BURNER, BURNER GASKET)
3	7500P-067	M6 NUT - BURNER DOOR
4	7350P-064	GASKET - BLOWER TO FLAPPER VALVE
5	7350P-023	FLAME RECTIFICATION PROBE (w/GASKET)
6	7350P-266	SPARK ELECTRODE (w/GASKET)
7	7250P-005	GASKET - PROBE/ELECTRODE
8	7250P-069	M4 X 8MM CHEESE HEAD PHILLIPS SCREWS - PROBE/ELECTRODE
9	7350P-238	COMBUSTION BLOWER
10	7350P-093	M8 X 20MM HEX HEAD BOLT - BLOWER
11	7350P-034-11	SWIRL PLATE
12	N/A	MOUNTING PLATE
13	N/A	M6 X 24MM FLAT HEAD SCREW - ADAPTER FLANGE
14	N/A	O-RING - BLOWER ADAPTER FLANGE
15	7350P-034-4	12MM GAS INJECTOR
16	7350P-034-2	BLOWER ADAPTER FLANGE (includes O-RING, SCREWS)
17	7350P-096	1" M X 1" F STREET ELBOW - ZINC PHOSPHATE COATED

Item#	Replacement Part #	Description
18	7350P-099	1" GAS BALL VALVE
19	7350P-098	1" NPT X 3" NIPPLE - ZINC PHOSPHATE COATED
20	7350P-095	1" NPT 90 DEGREE ELBOW
21	7350P-034-3	MAXIMUM FLOW RESTRICTOR FLANGE
22	N/A	O-RING - FLANGES
23	7350P-034-6	AIR ADJUSTMENT PORTS
24	N/A	M6 X 25MM SCREWS - FLANGE
25	7350P-034-5	1" NPT FLANGE
26	7350P-082	GAS PIPE ASSY w/SHUT-OFF - 1-1/4 IPS X 1 IPS
27	7350P-036	LOW PRESSURE GAS SWITCH w/O-RING (OPTIONAL)
28	7350P-034-8	HIRSCHMAN CONNECTOR
29	7350P-034	GAS VALVE (includes O-ring, Screws)
30	7350P-035	HIGH PRESSURE GAS SWITCH w/O-RING (OPTIONAL)
31	7350P-109	1-1/4" - 2" REDUCING COUPLING
32	7350P-626	THERMAL FUSE
33	7250P-162	CERAMIC REFRACTORY (LOCATED INSIDE END OF MODULE)
34	7450P-085	TEMPERATURE LIMIT SWITCH

Figure 33 – LP-445-S

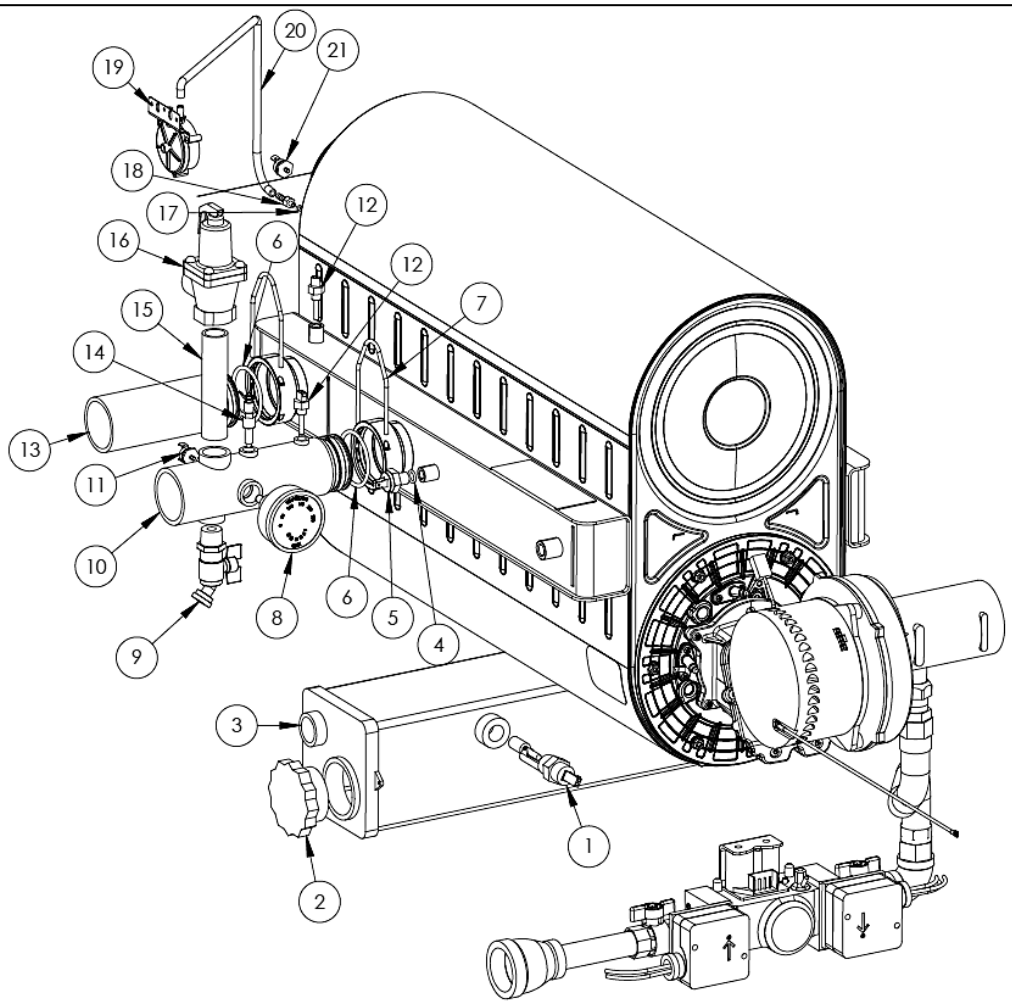

Item#	ModCon1000	ModCon1700	Description
1	7350P-167	7350P-167	CONDENSATE OVERFLOW SWITCH
2	7350P-113	7350P-113	2" PVC PLUG
3	7350P-613	7350P-613	CONDENSATE COLLECTOR
4	7500P-100	7500P-100	O-RING - ECO HIGH LIMIT SENSOR
5	7500P-033	7500P-033	ECO HIGH LIMIT SENSOR (w/O-RING)
6	7350P-072	7350P-072	O-RING - INLET/OUTLET NIPPLE
7	7350P-015	7350P-015	INLET/OUTLET NIPPLE CLIP
8	7250P-499	7250P-499	TEMP/PRESSURE GAUGE 200 PSI
9	7350P-327	7350P-327	SHUT-OFF DRAIN
10	7350P-318	7350P-318	OUTLET NIPPLE (w/O-RING)
11	7500P-002	7500P-002	ECO SWITCH - 190 DEG.
12	7250P-667	7250P-667	THERMISTOR
13	7350P-004	7350P-004	INLET NIPPLE
14	7350P-089	7350P-089	LOW WATER CUT-OFF PROBE
15	SN1018	SN1018	3/4" NPT X 3" NIPPLE - BRASS
16	7350P-223	7350P-223	75# RELIEF VALVE - 3/4" NPT
17	7250P-152	7250P-152	SILICONE O-RING 2-007 - BARBED FITTING
18	7250P-154	7250P-154	S.S. BARBED FITTING - 1/4 HOSE X 10-32
19	7250P-150	7250P-150	BLOCKED VENT PRESSURE SWITCH
20	7000P-805	7000P-805	PLASTIC TUBING 3/16 ID X 5/16 OD X 12"
21	7250P-739	7250P-729	FLUE ECO SWITCH - 160 DEG.
22	7350P-219	7350P-220	VENT ADAPTER

LP-428-V
06/04/13

Figure 34 – LP-428-V

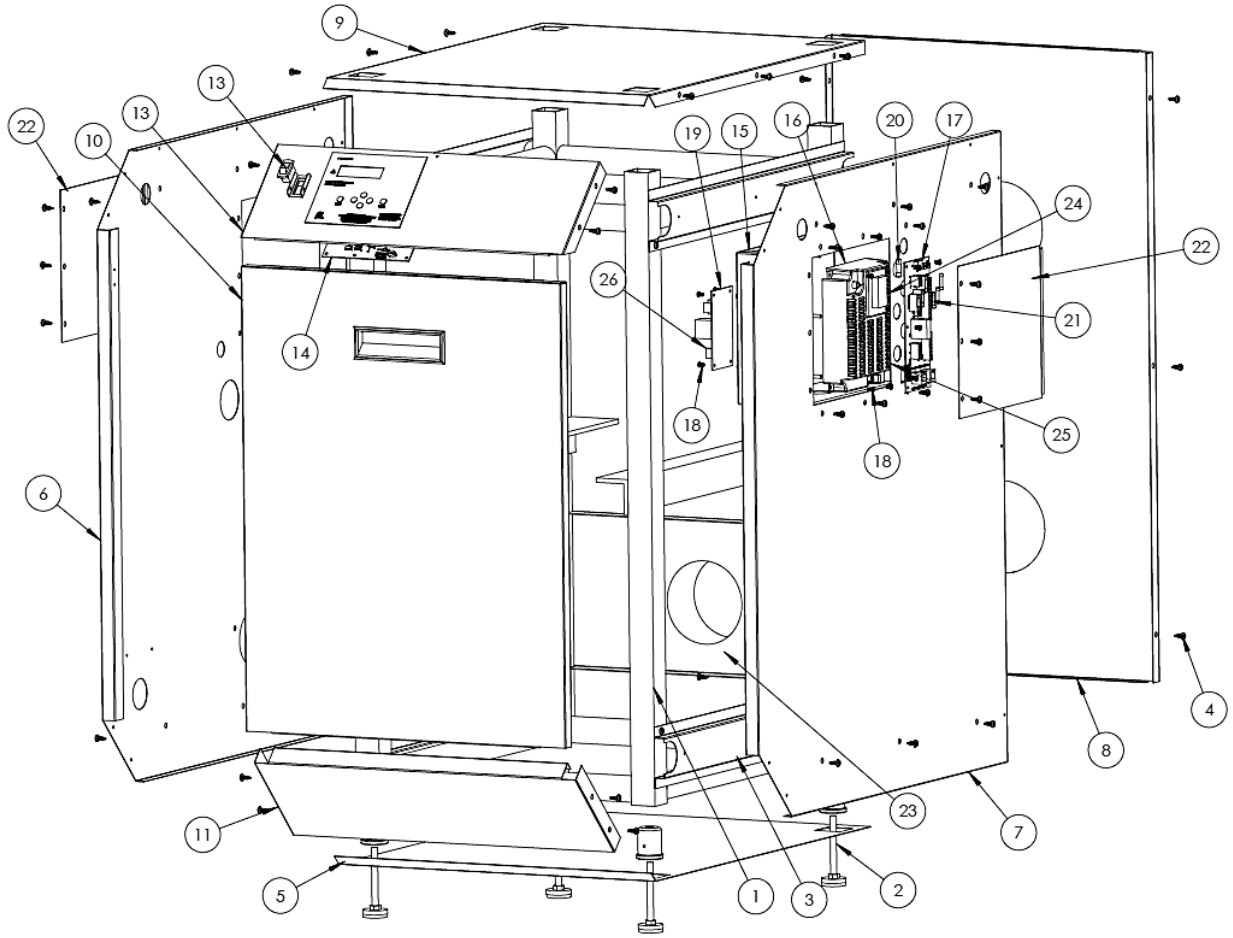

ITEM NO.	ModCon 1000	ModCon 1700	Description
1	7350P-040	7350P-041	MOD CON FRAME
2	7250P-673	7250P-673	LEVELING FOOT/MOUNT KIT (SINGLE MODELS ONLY)
3	7250P-316	7250P-069	JACKET MOUNTING BRACKET
4	7350P-063	7350P-063	#10 x 1/2" SELF TAPPING SCREW
5	7350P-315	7350P-061	JACKET - BOTTOM (w/SCREWS)
6	7350P-313	7350P-057	JACKET - LEFT SIDE (w/SCREWS)
7	7350P-314	7350P-058	JACKET - RIGHT SIDE (w/SCREWS)
8	7350P-049	7350P-126	JACKET - REAR (w/SCREWS)
9	7350P-312	7350P-052	JACKET - TOP (w/SCREWS)
10	7350P-047	7350P-047	JACKET - FRONT (w/SCREWS)
11	7350P-048	7350P-048	JACKET - LOWER FRONT (w/SCREWS)
12	7350P-046	7350P-046	JACKET - UPPER FRONT (w/MEMBRANE, SCREWS)
13	7500P-087	7500P-087	POWER SWITCH
14	7450P-028	7450P-028	DISPLAY BOARD
15	7350P-042	7350P-042	ELECTRICAL BOX
16	7350P-008	7350P-008	926 CONTROL BOARD
17	7350P-070	7350P-070	FIELD CONNECTION BOARD
18	7500P-115	7500P-115	6-32 X 1/4" PAN HEAD SCREW
19	N/A	7250P-580	RELAY BOARD
20	7250P-378	7250P-378	FUSE - CONTROL BOARD - 6.3 AMPS
21	7350P-129	7350P-129	FUSE - CONNECTION BOARD - 3.15 AMPS
22	7350P-062	7350P-062	ELECTRICAL BOX/ACCESS PANEL COVER
23	7350P-103	7350P-104	AIR INLET BRACKET
24	7350P-632	7350P-633	120V WIRING HARNESS (LOCATION)
25	7350P-740	7350P-738	LOW VOLTAGE WIRING HARNESS (LOCATION)
26	N/A	7350P-012	BLOWER WIRING HARNESS (LOCATION)

LP-205-B
10/19/12

Figure 35

BOILER START-UP REPORT

LIGHT OFF ACTIVITIES		DATE COMPLETED _____			
1) Fill the heating system	Check all piping and gas connections, verify all are tight				
	Pressurize system (12 – 15 PSI)	____ PSI			
	Add water to prime condensate cup				
	Percentage of glycol in system (0-50%)	____%			
	Verify near heater piping is properly supported				
2) Check gas pipe	Leak test using locally approved methods (consult jurisdictional code book)				
	Check incoming gas pressure (3.5” to 14” W.C.)	____ in w.c.	Static		
	What is the “drop” on light off (No more than 1” W.C.)?	____ in w.c.	Dynamic		
3) Check electrical connections	Ensure all electrical connections of line voltage (pumps, etc.) and low voltage circuits (system sensor, outdoor sensor, etc.) are properly wired.				
	Ensure both boiler power switches are activated before running the boiler.				
4) Check combustion	Check and adjust (if necessary) carbon dioxide content	____% CO2	High Fire	____% CO2	Low Fire
	Check and adjust (if necessary) carbon monoxide content	____ppm CO	High Fire	____ ppm CO	Low Fire
5) Convert the boiler fuel type	If necessary, convert the heater to the proper gas type				
Mod Con 1000 Models ONLY	Locate the stickers in the appropriate locations on the heater				
	Verify combustion settings after gas conversion, Carbon Dioxide	____% CO2	High Fire	____% CO2	Low Fire
	Verify combustion settings after gas conversion, Carbon Monoxide	____ppm CO	High Fire	____ppm CO	Low Fire
6) Record ionization current	Check uA reading at on the status menu (see start-up section)	____ uA	High Fire	____ uA	Low Fire
7) System Setting	Verify system settings	Central Heating Setpoint	_____	Central Heating Differential	_____
8) Indirect water heater sensor	Verify safety and operation of the indirect water heater, record settings	DHW Setpoint	_____	DHW Differential	_____
9) Verify system operation with indirect water heater aquastat	Turn up aquastat on storage tank to verify wiring connections. Boiler should fire.				
Notes:					

Table 24

MAINTENANCE REPORT

CAUTION
In unusually dirty or dusty conditions, care must be taken to keep boiler cabinet door in place at all times. Failure to do so VOIDS WARRANTY!

⚠ WARNING
Allowing the boiler to operate with a dirty combustion chamber will hurt operation. Failure to clean the heat exchanger as needed by the installation location could result in boiler failure, property damage, personal injury, or death. Such product failures ARE NOT covered under warranty.

The boiler requires minimal periodic maintenance under normal conditions. However, in unusually dirty or dusty conditions, periodic vacuuming of the cover to maintain visibility of the display and indicators is recommended.

Periodic maintenance should be performed once a year by a qualified service technician to assure that all the equipment is operating safely and efficiently. The owner should make necessary arrangements with a qualified heating contractor for periodic maintenance of the boiler. Installer must also inform the owner that the lack of proper care and maintenance of the boiler may result in a hazardous condition.

INSPECTION ACTIVITIES		DATE LAST COMPLETED			
PIPING		1st YEAR	2nd YEAR	3rd YEAR	4th YEAR*
Near heater piping	Check heater and system piping for any sign of leakage; make sure they are properly supported.				
Vent	Check condition of all vent pipes and joints. Check for any obstructions at exhaust and intake termination points. Check clearances (see Venting Section for further details).				
Gas	Check Gas piping, test for leaks and signs of aging. Make sure all pipes are properly supported.				
SYSTEM					
Visual	Do a full visual inspection of all system components.				
Functional	Test all functions of the system (Heat, Safeties)				
Temperatures	Verify safe settings on heater or Anti-Scald Valve				
Temperatures	Verify programmed temperature settings				
ELECTRICAL					
Connections	Check wire connections. Make sure they are tight.				
Smoke and CO detector	Verify devices are installed and working properly. Change batteries if necessary.				
Circuit Breakers	Check to see that the circuit breaker is clearly labeled. Exercise circuit breaker.				
Switch and Plug	Verify ON/OFF switch and convenience plug are both functional				
CHAMBER/BURNER					
Combustion Chamber	Check burner tube and combustion chamber coils. Clean according to maintenance section of manual. Vacuum combustion chamber. Replace any gaskets that show signs of damage.				
Spark Electrode	Clean. Set gap at ¼".				
Flame Probe	Clean. Check ionization in uA (d7 on status menu in Start-up Procedures). Record high fire and low fire.				
CONDENSATE					
Neutralizer	Clean out condensate neutralizer. Use wet/dry vacuum. Check for all potential obstruction issues. Replenish marble chips or lime crystals if needed (no smaller than ¾"). Refill system with water. WARNING: You must verify flow of condensate and make sure the cap is connected properly before leaving boiler unattended.				
Condensate system	1. Check entire condensate system to make sure there are no obstructions in flow. 2. Make sure the condensate pump is working properly, verify all connections.				
GAS					
Pressure	Measure incoming gas pressure (3.5" to 14" W.C.)				
Pressure Drop	Measure drop in pressure on light off (no more than 1" W.C.)				
Check gas pipe for leaks	Check piping for leaks. Verify that all are properly supported.				
COMBUSTION					
CO/CO2 Levels	Check CO and CO_2 levels in Exhaust (See Start-up Procedures for ranges). Record at high and low fire.				
SAFETIES					
ECO (Energy Cut Out)	Check continuity on Flue and Water ECO. Replace if corroded.				
Thermistors	Check wiring. Verify through ohms reading.				
FINAL INSPECTION					
Check list	Verify that you have completed entire check list. WARNING: FAILURE TO DO SO COULD RESULT IN SERIOUS INJURY OR DEATH.				
Homeowner	Review what you have done with the homeowner.				

Table 25 - *Continue annual maintenance beyond the 4th year as required.

ADDITIONAL INSTALLATION REQUIREMENTS FOR THE COMMONWEALTH OF MASSACHUSETTS

In the Commonwealth of Massachusetts, the installer or service agent shall be a plumber or gas fitter licensed by the Commonwealth.

When installed in the Commonwealth of Massachusetts or where applicable state codes may apply; the unit shall be installed with a CO detector per the requirements listed below.

5.08: Modifications to NFPA-54, Chapter 10

(1) Revise NFPA-54 section 10.5.4.2 by adding a second exception as follows:

Existing chimneys shall be permitted to have their use continued when a gas conversion burner is installed, and shall be equipped with a manually reset device that will automatically shut off the gas to the burner in the event of a sustained back-draft.

(2) Revise 10.8.3 by adding the following additional requirements:

(a) For all side wall horizontally vented gas fueled equipment installed in every dwelling, building or structure used in whole or in part for residential purposes, including those owned or operated by the Commonwealth and where the side wall exhaust vent termination is less than seven (7) feet above finished grade in the area of the venting, including but not limited to decks and porches, the following requirements shall be satisfied:

1. INSTALLATION OF CARBON MONOXIDE DETECTORS. At the time of installation of the side wall horizontal vented gas fueled equipment, the installing plumber or gasfitter shall observe that a hard wired carbon monoxide detector with an alarm and battery back-up is installed on the floor level where the gas equipment is to be installed. In addition, the installing plumber or gasfitter shall observe that a battery operated or hard wired carbon monoxide detector with an alarm is installed on each additional level of the dwelling, building or structure served by the side wall horizontal vented gas fueled equipment. It shall be the responsibility of the property owner to secure the service of qualified licensed professionals for the installation of hard wired carbon monoxide detectors

a. In the event that the side wall horizontally vented gas fueled equipment is installed in a crawl space or an attic, the hard wired carbon monoxide detector with alarm and battery back-up may be installed on the next adjacent floor level.

b. In the event that the requirements of this subdivision cannot be met at the time of completion of installation, the owner shall have a period of thirty (30) days to comply with the above requirements; provided, however, that during said thirty (30) day period, a battery operated carbon monoxide detector with an alarm shall be installed.

2. APPROVED CARBON MONOXIDE DETECTORS. Each carbon monoxide detector as required in accordance with the above provisions shall comply with NFPA 720 and be ANSI/UL 2034 listed and IAS certified.

3. SIGNAGE. A metal or plastic identification plate shall be permanently mounted to the exterior of the building at a minimum height of eight (8) feet above grade directly in line with the exhaust vent terminal for the horizontally vented gas fueled heating appliance or equipment. The sign shall read, in print size no less than one-half (1/2) inch in size, "GAS VENT DIRECTLY BELOW, KEEP CLEAR OF ALL OBSTRUCTIONS".

4. INSPECTION. The state or local gas inspector of the side wall horizontally vented gas fueled equipment shall not approve the installation unless, upon inspection, the inspector observes carbon monoxide detectors and signage installed in accordance with the provisions of 248 CMR 5.08 (2)(a) 1 through 4.

(b) EXEMPTIONS: the following equipment is exempt from 248 CMR 5.08 (2)(a) 1 through 4:

1. The equipment listed in Chapter 10 entitled "Equipment Not Required to be Vented" in the most current edition of NFPA 54 as adopted by the Board; and

2. Product Approved side wall horizontally vented gas fueled equipment installed in a room or structure separate from the dwelling, building or structure used in whole or in part for residential purposes.

(c) MANUFACTURER REQUIREMENTS – GAS EQUIPMENT VENTING SYSTEM PROVIDED. When the manufacturer of Product Approved side wall horizontally vented gas equipment provides a venting system design or venting system components with the equipment, the instructions provided by the manufacturer for installation of the equipment and the venting system shall include:

1. Detailed instructions for the installation of the venting system design or the venting system components; and

2. A complete parts list for the venting system design or venting system.

(d) MANUFACTURER REQUIREMENTS – GAS EQUIPMENT VENTING SYSTEM NOT PROVIDED. When the manufacturer of a Product Approved side wall horizontally vented gas fueled equipment does not provide the parts for venting the flue gases, but identifies "special venting systems", the following requirements shall be satisfied by the manufacturer:

1. The referenced "special venting system" instructions shall be included with the appliance or equipment installation instructions; and

2. The "special venting systems" shall be Product Approved by the Board, and the instructions for that system shall include a parts list and detailed installation instructions.

(e) A copy of all installation instructions for all Product Approval side wall horizontally vented gas fueled equipment, all venting instructions, all parts lists for venting instructions, and/or all venting design instructions shall remain with the appliance or equipment at the completion of the installation.

MAINTENANCE NOTES

HTP CUSTOMER INSTALLATION RECORD FORM

The following form should be completed by the installer for you to keep as a record of the installation in case of a warranty claim. After reading the important notes at the bottom of the page, please also sign this document.

Customer's Name:	
Installation Address:	
Date of Installation:	
Installer's Code/Name:	
Product Serial Number(s):	
Comments:	
Installer's Phone Number:	
Signed by Installer:	
Signed by Customer:	

IMPORTANT NOTES:

Customer: Please only sign after the installer has reviewed the installation, safety, proper operation and maintenance of the system. In the case that the system has any problems, please call the installer. If you are unable to make contact, please contact your HTP Sales Representative.

Distributor/Dealer: Please insert contact details.