Everlast

Light Duty Commercial Electric Water Heaters

Use and Care Manual

Installation

Start-Up

Maintenance

Parts

Warranty

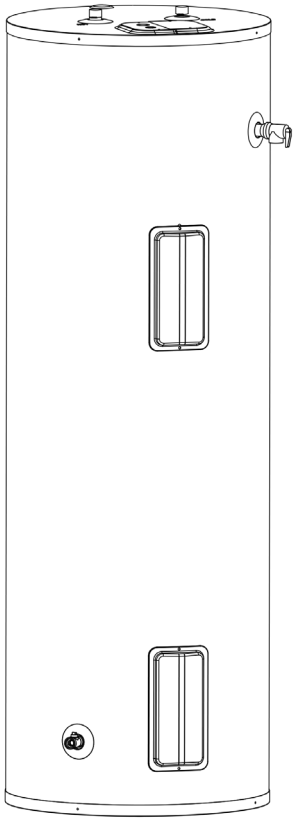

WARNING
This manual must only be used by a qualified installer / service technician. Read all instructions in this manual before installing. Perform steps in the given order. Failure to do so could result in substantial property damage, severe personal injury, or death.
California Proposition 65 Warning: This product contains chemicals known to the State of California to cause cancer, birth defects, or other reproductive harm.
NOTICE
HTP reserves the right to make product changes or updates without notice and will not be held liable for typographical errors in literature.
The surfaces of these products contacted by potable (consumable) water contain less than 0.25% lead by weight as required by the Safe Drinking Water Act, Section 1417.
NOTE TO CONSUMER: PLEASE KEEP ALL INSTRUCTIONS FOR FUTURE REFERENCE.

272 Duchaine Blvd. New Bedford, MA 02745 www.htproducts.com

lp-565 Rev. 002 Rel. 007 Date 8.22.19

SPECIAL ATTENTION BOXES

The following defined terms are used throughout this manual to bring attention to the presence of hazards of various risk levels or to important product information.

DANGER

DANGER indicates an imminently hazardous situation which, if not avoided, will result in serious personal injury or death.

WARNING

WARNING indicates a potentially hazardous situation which, if not avoided, could result in personal injury or death.

CAUTION

CAUTION indicates a potentially hazardous situation which, if not avoided, may result in moderate or minor personal injury.

CAUTION

CAUTION used without the safety alert symbol indicates a potentially hazardous situation which, if not avoided, may result in property damage.

NOTICE

NOTICE is used to address practices not related to personal injury.

Foreword

This manual is intended to be used in conjunction with other literature provided with the water heater. This includes all related control information. It is important that this manual, all other documents included in this system, and additional publications be reviewed in their entirety before beginning any work.

Installation should be made in accordance with the regulations of the Authority Having Jurisdiction, local code authorities, and utility companies which pertain to this type of water heating equipment.

Authority Having Jurisdiction (AHJ) – The AHJ may be a federal, state, local government, or individual such as a fire chief, fire marshal, chief of a fire prevention bureau, labor department or health department, building official or electrical inspector, or others having statutory authority. In some circumstances, the property owner or his/her agent assumes the role, and at government installations, the commanding officer or departmental official may be the AHJ.

NOTE: HTP reserves the right to modify product technical specifications and components without prior notice.

For the Installer

This water heater must be installed by qualified and licensed personnel. The installer should be guided by the instructions furnished with the water heater, and by local codes and utility company requirements.

This water heater complies with the energy efficiency requirements of 10 CFR § 431.110 (Commercial Water Heaters). It does not comply with 10 CFR § 430.32(d) (Consumer Water Heaters).

Installations Must Comply With:
Local, state, provincial, and national codes, laws, regulations, and ordinances.

The latest version of the *National Electrical Code, NFPA No. 70*.

For Your Records

Write the Product Model and Serial Numbers:

Model # _____

Serial # _____

These numbers are listed on the product ratings label.
Keep this manual and information for future reference.

WARNING

IMPORTANT SAFETY INSTRUCTIONS

When using electrical appliances, basic safety precautions to reduce the risk of fire, electric shock, or injury to persons should be followed, including:

1. READ ALL INSTRUCTIONS BEFORE USING THIS WATER HEATER.

2. This water heater must be grounded. Connect only to a properly grounded outlet. See Part 4 – Wiring, this manual, for grounding details.

3. Install or locate this water heater only in accordance with the provided installation instructions.

4. Use this water heater only for its intended use as described in this manual.

5. Do not operate this water heater if it has been damaged or dropped.

8. This water heater should be serviced only by qualified service personnel. Contact the water heater installer or a qualified service agency for examination, repair, or adjustment.

SAVE THESE INSTRUCTIONS

From the Uniform Plumbing Code 2000 - Section 510 - Protection From Damage

1. Water heaters generating a glow, spark or flame capable of igniting flammable vapors may be installed in a garage, provided the pilots, burners or heating elements and switches are at least eighteen (18) inches (457 mm) above the floor level.

2. Where such water heaters installed within a garage are enclosed in a separate, approved compartment having access only from outside of the garage, such water heaters may be installed at floor level provided the required combustion air is also taken from the exterior of the garage. Fuel burning water heaters having sealed combustion chambers need not be elevated.

3. All water heaters installed in areas where they may be subjected to mechanical damage shall be suitably guarded against such damage by being installed behind adequate barriers or by being elevated or located out of the normal path of a vehicle using any such garage.

4. In seismic zones 3 and 4, water heaters shall be anchored or strapped to resist horizontal displacement due to earthquake motion. Strapping shall be at points within the upper one-third (1/3) and lower one-third (1/3) of its vertical dimensions. At the lower point, a minimum distance of four (4) inches (102 mm) shall be maintained above the controls with the strapping.

5. An water heater supported from the ground shall rest on level concrete or other approved base extending not less than three (3) inches (76 mm) above the adjoining ground level.

6. When an water heater is located in an attic, attic-ceiling assembly, floor-ceiling assembly, or floor-subfloor assembly where damage may result from a leaking water heater, a watertight pan of corrosion resistant materials shall be installed beneath the water heater with a minimum three-quarter (3/4) inch (20 mm) diameter drain to an approved location.

NOTE: If the water heater is exposed to the following, do not operate. Immediately call a qualified service technician.

1. Fire
2. Damage
3. Water

Failure to follow this information could result in property damage, severe personal injury, or death.

Table of Contents

Part 1 - General Safety Information **3**
A. When Servicing the Water Heating System 3
B. Heater Water 3
C. Freeze Protection 3
D. Water Temperature Adjustment 3
Part 2 - Prepare the Water Heater **4**
A. What's in the Box 4
B. Locating the Water Heater 4
C. Water Chemistry Requirements 5
Part 3 - Piping **8**
A. Plumbing 8
B. Thermal Expansion 8
C. Condensation 8
D. Insulation Blankets 8
E. Temperature and Pressure Relief Valve 8
F. Scalding 9
G. Filling the Heater 9
H. Applications 10
Part 4 - Wiring **10**
Part 5 - Installation Checklist **11**
Part 6 - Operation **11**
A. Combination Thermostat and High Limit Control (ECO) 11
B. Thermostat Adjustment and ECO Reset 11
C. Heating Element Replacement Procedure 12
Part 7 - Maintenance **13**
Part 8 - Troubleshooting **15**
Limited Warranty 16
Customer Installation Record Form 18

Part 1 - General Safety Information

This water heater is approved for indoor installations only and is not intended for use as a pool heater. Clearance to combustible materials: 0" top, bottom, sides, and back. Heater must have room for service: 24" front, 6" top, and 6" sides are minimum recommended service clearances. (A combustible door or removable panel is acceptable front clearance.) This water heater has been approved for closet installation and installation on combustible flooring. Do not install directly on carpeting. Install the water heater in a location where temperature and pressure relief valve discharge or a leak will not result in damage to the surrounding area. If such a location is not available, install an auxiliary catch pan.

⚠ WARNING

Installer - Read all instructions in this manual before installing. Perform steps in the given order.

User - This manual is for use only by a qualified heating installer / service technician. Have this water heater serviced / inspected annually by a qualified service technician.

FAILURE TO ADHERE TO THE GUIDELINES ON THIS PAGE CAN RESULT IN SUBSTANTIAL PROPERTY DAMAGE, SEVERE PERSONAL INJURY, OR DEATH.

NOTE: Obey all local codes. Obtain all applicable permits before installing the water heater.

NOTE: Install all system components and piping in such a manner that does not reduce the performance of any fire rated assembly.

DO NOT USE THIS WATER HEATER IF ANY PART HAS BEEN SUBMERGED IN WATER. Immediately call a qualified service technician. The water heater MUST BE replaced if it has been submerged. Operating a previously submerged water heater could result in property damage, severe personal injury, or death.
NOTE: Water heater damage due to flood or submersion is considered an Act of God, and IS NOT covered under product warranty.

CAUTION

High heat sources (sources generating heat 100°F / 37°C or greater, such as stove pipes, space heaters, etc.) may damage plastic components of the water heater as well as plastic vent pipe materials. Such damages ARE NOT covered by warranty. It is recommended to keep a minimum clearance of 8" from high heat sources. Observe heat source manufacturer instructions, as well as local, state, provincial, and national codes, laws, regulations and ordinances when installing this water heater and related components near high heat sources.

Do not use this water heater for anything other than its intended purpose (as described in this manual). Doing so could result in property damage and WILL VOID product warranty.

NOTICE

UNCRATING THE WATER HEATER - Any claims for damage or shortage in shipment must be filed immediately against the transportation company by the consignee.

A. When Servicing the Water Heating System

⚠ WARNING

Be sure to disconnect electrical power before performing service. Failure to do so could result in electrical shock, property damage, serious personal injury, or death.

NOTE: When inquiring about service or troubleshooting, reference the model and serial numbers from the water heater rating label.

To avoid severe burns, allow water heater and associated equipment to cool before servicing.

B. Heater Water

Do not use petroleum-based cleaning or sealing compounds in a water heating system. Gaskets and seals in the system may be damaged. This can result in substantial property damage.

Do not use "homemade cures" or "patent medicines". Damage to the water heater, substantial property damage, and/or serious personal injury may result.

C. Freeze Protection

NOTE: Consider piping and installation when determining heater location. Failure of the water heater due to freeze related damage IS NOT covered by product warranty.

⚠ WARNING

NEVER use any toxic chemical, including automotive, standard glycol antifreeze, or ethylene glycol made for hydronic (non-potable) systems. These chemicals can attack gaskets and seals in water systems, are poisonous if consumed, and can cause personal injury or death.

D. Water Temperature Adjustment

If the water heater is going to have a set temperature above 120°F, it is recommended to use an ASSE 1017 rated mixing valve to avoid severe burns or death from scalding temperatures.

⚠ WARNING

Households with small children, disabled, or elderly persons may require a 120°F or lower temperature setting to prevent severe personal injury or death due to scalding.

Approximate Time / Temperature Relationships in Scalds	
120ºF	More than 5 minutes
125ºF	1 1/2 to 2 minutes
130ºF	About 30 seconds
135ºF	About 10 seconds
140ºF	Less than 5 seconds
145ºF	Less than 3 seconds
150ºF	About 1 1/2 seconds
155ºF	About 1 second

Table 1 - Approximate Time / Temperature Relationships in Scalds

Part 2 - Prepare the Water Heater

Remove all sides of the shipping crate to allow the heater to be moved into its installation location.

CAUTION

COLD WEATHER HANDLING - If the water heater has been stored in a very cold location (BELOW 0ºF) before installation, handle with care until the components come to room temperature. Failure to do so could result in damage to the water heater.

A. What's in the Box

Components included with the water heater:

- Drain Valve
- Temperature and Pressure Relief Valve
- Insulation
- Cover with Screws
- Hot Water Outlet
- Dip Tube
- Use and Care Manual and Warranty

NOTE: Some components may ship factory installed.

B. Locating the Water Heater

CAUTION

All water heaters eventually leak. Locate the water heater where any leakage from the relief valve, related piping, tank, or connections will not result in damage to surrounding areas or lower floors of the building. Any water heater should be installed in such a manner that if it should leak the resulting flow of water will not cause damage to the area in which it is installed. National Plumbing codes require a drain pan for any water heater installation. This drain pan should be sized with a maximum depth of 2", and a minimum diameter 2" greater than the diameter of the water heater. The drain pan should empty into an open drain line. This drain line should be 3/4" ID minimum, piped to an open drain. Leakage damages ARE NOT covered by warranty. Failure to install a drain pan is the sole responsibility of the owner and/or installer. Reference UPC 2000 (Uniform Plumbing Code) Section 510 - Protection from Damage or IPC 200 (International Plumbing code) Section 504 - Safety Devices. Leakage damages ARE NOT covered by warranty.
In addition, water leak detection devices and automatic water shutoff valves are readily available at plumbing supply houses. IT IS HIGHLY RECOMMENDED BY THE MANUFACTURER TO INSTALL WATER LEAK DETECTION DEVICES AND AUTOMATIC SHUTOFF VALVES IN ANY WATER HEATER INSTALLATION WHERE A LEAKAGE OF WATER COULD RESULT IN PROPERTY DAMAGES.

WARNING

This water heater is certified for indoor use only. DO NOT INSTALL OUTDOORS. Outdoor installations ARE NOT covered by warranty. Failure to install the water heater indoors could result in property damage, severe personal injury, or death.

WARNING

This water heater must be installed upright in the vertical position as described in this manual. DO NOT attempt to install this water heater in any other orientation. Doing so will result in improper water heater operation and property damage, and could result in serious personal injury or death.

1. Installation Area (Mechanical Room) Operating Conditions

- Ensure ambient temperatures are higher than 32ºF / 0ºC and lower than 104ºF / 40ºC
- Avoid continuously high levels of humidity
- Never close existing ventilation openings

NOTE: When installing in a zero clearance location, it may not be possible to read or view some product labeling. It is recommended to make note of the water heater model and serial number.

CAUTION

The service life of the water heater's exposed metallic surfaces, such as the junction box, is directly influenced by proximity to damp and salty marine environments. In such areas higher concentration levels of chlorides from sea spray coupled with relative humidity can lead to degradation of water heater components.

WARNING

Incorrect operating conditions can lead to damage to the heating system and put safe operation at risk. Ensure that the installation location adheres to the information included in this manual. Failure to do so could result in property damage, serious personal injury, or death. Failure of the water heater or components due to incorrect operating conditions IS NOT covered by product warranty.

2. Choose a location for the water heater as centralized to the piping and electrical system as possible. Also, locate the water heater and domestic water piping where it will not be exposed to freezing temperatures. All piping should be insulated. Additionally, place the water heater so that the drain, controls, and inlets/outlets are easily accessible.

NOTE: To save on heating costs and improve energy efficiency keep the distance between the water heater and fixtures to a minimum to reduce heat loss from excess piping and keep friction loss at a minimum. Ensure all water heater piping is properly insulated to minimize heat loss.

NOTE: If you do not provide the minimum clearances shown in Figure 1, it might not be possible to service the water heater without removing it from the space.

NOTE: A combustible door or removable panel is acceptable front clearance.

NOTE: In the State of California, the water heater must be braced, anchored, or strapped to avoid moving during an earthquake. Contact local utilities for code requirements in your area. Visit http://www.dsa.dgs.ca.gov or call 1-916-445-8100 and request instructions.

However, applicable local codes shall govern installation. For residential water heaters of a capacity of greater than 52 gallons, consult the local building jurisdiction for acceptable bracing procedures.

3. Check area around water heater. Remove any combustible materials, gasoline, and other flammable liquids.

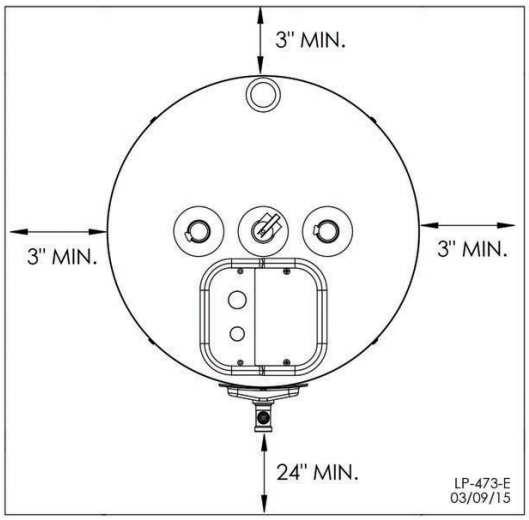

Figure 1 - Recommended Service Clearances - NOTE: Overhead View Not Representative of All Models

DANGER

This water heater must not be located near flammable liquids such as gasoline, butane, liquefied propane, adhesives, solvents, paint thinners, etc., as the controls of this water heater could ignite these vapors and cause an explosion resulting in property damage, severe personal injury, or death.

4. If the water heater is to replace an existing water heater, check for and correct any existing system problems such as:

- System leaks
- Location that could cause the system and water heater to freeze and leak
- Incorrectly-sized expansion tank

5. This water heater must be installed vertical on a level surface.

C. Water Chemistry Requirements

CAUTION

Chemical imbalance of the water supply may affect efficiency and cause severe damage to the appliance and associated equipment. Water quality must be professionally analyzed to determine whether it is necessary to treat the water. Various solutions are available to adjust water quality. Adverse water quality will affect the reliability of the system. In addition, operating temperatures above 135°F will accelerate the build-up of lime scale and possibly shorten appliance service life. Failure of an appliance due to lime scale build-up, low pH, or other chemical imbalance IS NOT covered by the warranty.

The water must be potable, free of corrosive chemicals, sand, dirt, and other contaminates. It is up to the installer to ensure the water does not contain corrosive chemicals or elements that can damage the heat exchanger. Potable water is defined as drinkable water supplied from utility or well water in compliance with EPA secondary maximum contaminant levels (40 CFR Part 143.3). If the water contains contaminants higher than outlined by the EPA, water treatment is recommended and additional, more frequent maintenance may be required.

If you suspect that your water is contaminated in any way, discontinue use of the appliance and contact an authorized technician or licensed professional.

- **Water pH between 6.5 and 8.5**
  - pH levels below 6.5 can cause an increase in the rate of corrosion. pH of 8.5 or higher can potentially cause lime scale build-up
  - Maintain water pH between 6.5 and 8.5. Check with litmus paper or have it chemically analyzed by a local water treatment company.
  - If the pH is not between 6.5 and 8.5, consult a local water treatment company for solutions.
- **Hardness less than 7 grains (120 mg/L) (Commercial Use - water temperatures of 140°F and greater)**
  - Hardness levels above the required amounts can lead to lime scale build-up throughout the system. Water below 5 grains/gallon (85 mg/L) may be over softened.
  - Consult local water treatment companies for unusually hard water areas (above the required amounts) or for other treatment solutions if water is being over softened (below 5 grains/gallon [85 mg/L]).
- **Chloride concentration less than 100 ppm (mg/L)**
  - Do not fill appliance or operate with water containing chlorides in excess of 100 ppm (mg/L).
  - Using chlorinated fresh water should be acceptable as levels are typically less than 5 ppm (mg/L).
  - Do not connect the appliance to directly heat swimming pool or spa water.
- **Total Dissolved Solids (TDS) less than 500 ppm (mg/L)**
  - Total dissolved solids are minerals, salts, metals, and charged particles that are dissolved in water.
  - The greater the amounts of TDS present, the higher the corrosion potential due to increased conductivity in the water.
  - If using softened water to fill the appliance, it is still possible to have high TDS. This water can be corrosive. Consult local water treatment companies for other treatment solutions to reduce this affect.

***NOTE:** To promote appliance service life, it is strongly recommended to follow the maintenance procedures in this manual.

CAUTION

Failure of electric elements due to lime scale build-up on the heating surface, low pH, or other imbalance IS NOT covered by the warranty.

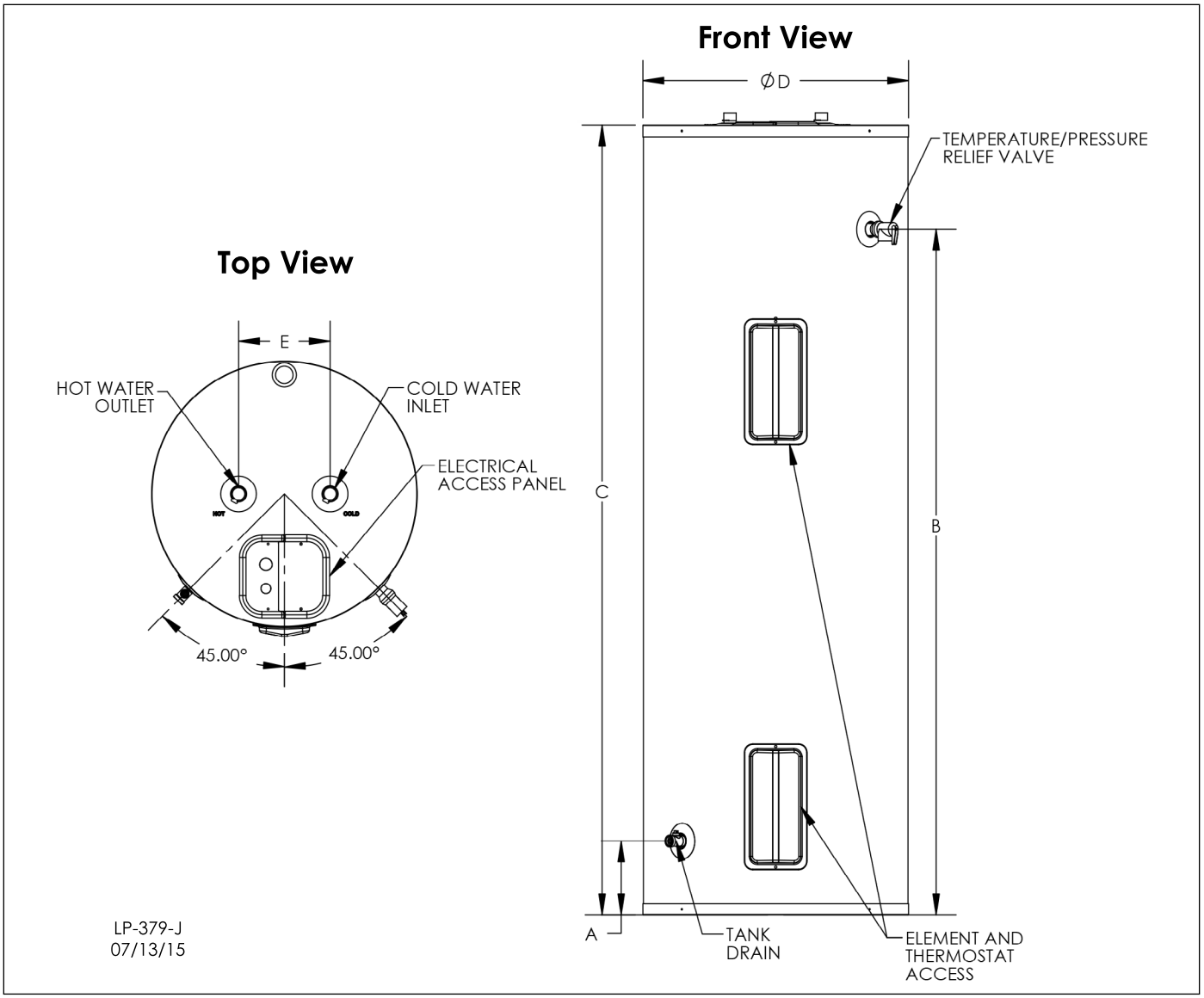

Figure 2 - Dimensional Drawing - Non-Simultaneous Operation

Specifications and Dimensions										Water Temperature Ratings		
Light Commercial Models	**Storage Capacity**	**A**	**B**	**C**	**D**	**E**	**Safety Listing**	**Hot / Cold Inlets**	**Shipping Weight (Lbs. Est.)**	**Min. Delivered Temp.**	**Max. Delivered Temp.**	**High Temp. Limit**
EVC080	80	6 1/2″	60″	69″	23 1/4″	8″	UL 1453	3/4″ NPT	151	**120ºF** (48.8 C)	**181ºF** (82.8 C)	**200ºF** (93.3 C)
EVC100	100	7 1/4″	52″	61″	27″				206			
EVC115	115		60 1/4″	69″					224			

Table 2 - Specifications and Dimensions - * Refers to Electrical Specifications - See Table 3 for Electrical Specifications**

Model #	# Elements and Thermostats	Available Wattage	Voltage	Full Load Current in Amps (Single Phase)
C2X030	2	3,000	240	13
C2X045		4,500		19
C2X055		5,500		23

Table 3 - Electrical Specifications Including Corresponding Wattages / Voltages / Amperages - * Refers to Model Type and Gallon Size - See Table 2 for Model Specifications and Dimensions**

INSTALLING COLD INLET AND HOT OUTLET FITTINGS

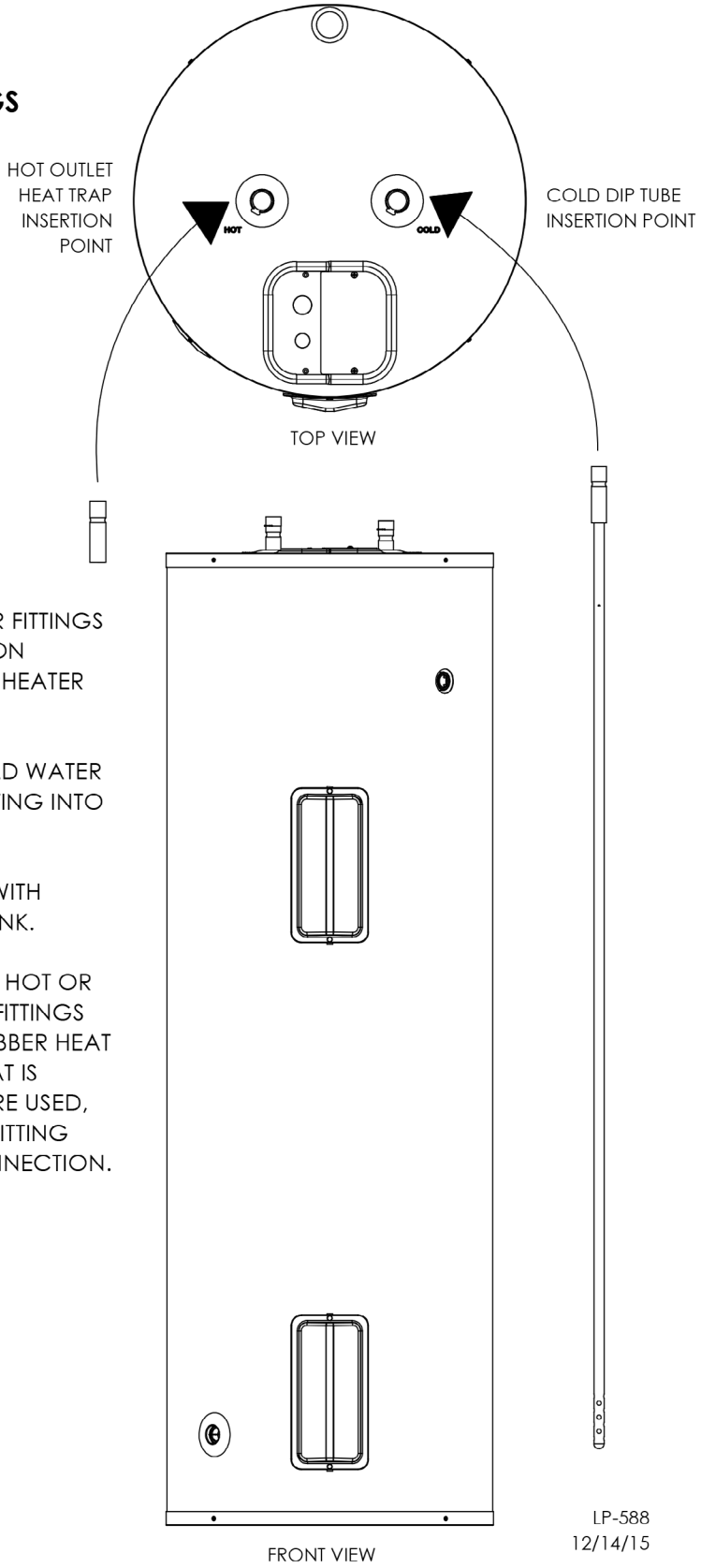

1. THE HOT WATER AND COLD WATER FITTINGS MUST BE INSTALLED IN THE ORIENTATION SHOWN IN THESE DIRECTIONS OR THE HEATER WARRANTY WILL BE VOIDED.

2. IT IS REQUIRED TO INSTALL THE COLD WATER DIP TUBE INTO THE TANK PRIOR TO FITTING INTO AREAS WITH LOW CEILING HEIGHT.

3. PLEASE USE TAPE AND PIPE DOPE WITH TEFLON TO SEAL FITTINGS INTO THE TANK.

4. **NOTE**: DO NOT APPLY HEAT TO THE HOT OR COLD WATER CONNECTIONS. THESE FITTINGS ARE EQUIPPED WITH PLASTIC AND RUBBER HEAT TRAPS THAT WILL BE DAMAGED IF HEAT IS APPLIED. IF SWEAT CONNECTIONS ARE USED, SWEAT TUBING TO ADAPTER BEFORE FITTING ADAPTER TO THE WATER HEATER CONNECTION.

Figure 3 - Installing Cold Inlet and Hot Outlet Fittings

CAUTION

The Cold Inlet and Hot Outlet Fittings MUST BE INSTALLED according to the steps in Figure 3 for the electric water heater to operate properly. Failure to install these fittings properly will result in improper water heater operation, possible substantial property damage, and increased costs. Service calls to repair the installation and properly install these fittings ARE NOT COVERED by water heater warranty. Improper installation WILL VOID the water heater warranty.

Part 3 - Piping

A. Plumbing

It is mandatory that all plumbing be done in accordance with federal, local, and state plumbing codes and practices. Failure to properly install the water heater WILL VOID the warranty. It is also necessary to use both thread tape and pipe sealing compound on all mechanical plumbing connections.

It is recommended to use unions on the hot and cold water connections to easily disconnect the water heater for servicing.

CAUTION

Dielectric unions or galvanized steel fittings must not be used in a system with this water heater. Doing so WILL VOID the warranty. It is recommended to use only copper, brass, or stainless steel fittings. Teflon thread sealant must be used on all connections.

1. Install a shut-off or check valve or both on the inlet connection on the top of the heater. Connect the cold water supply line to the shut-off valve or check valve. Refer to piping Applications, this manual.

CAUTION

Do not apply heat to the Hot or Cold water heater connections. If sweat connections are used, sweat tubing to the adapter before fitting adapter to the water connections on the heater. Any heat applied to the water heater connections will permanently damage the dip tube and/or heat traps. Damages due to improper installation practices ARE NOT covered by warranty.

2. Connect the hot water line to the connection marked "HOT" on the top of the water heater.
3. Install the T&P Valve in the opening provided near the top of the heater.
4. Install drain valve in the opening provided near the bottom of the heater.

B. Thermal Expansion

A check valve may be installed in the cold water inlet line as a separate backflow preventer, or may be part of a pressure reducing valve, water meter, or water softener. An "**open water system**" refers to a system without a check valve. A "**closed water system**" refers to a system with a check valve installed in the cold water inlet line.

As water is heated, it expands in volume and increases pressure within the water system. This action is referred to as "**thermal expansion**". In an open water system, expanding water which exceeds the capacity of the system flows back into the city main where pressure is easily dissipated.

A closed water system prevents expanding water from flowing back to the city main. The resulting thermal expansion can rapidly increase pressure in the water heater and system piping. This rapid pressure increase can exceed the setting of the pressure relief valve, causing it to operate during each heating cycle, resulting in discharge from the T&P. This rapid and repeated expansion and contraction of components in the system can cause premature failure of system components, including the relief valve and possibly the water heater. Replacing the relief valve **will not** correct thermal expansion.

A potable hot water expansion tank is required to offset thermal expansion. Expansion tanks are designed with an air cushion built in that compresses as system pressure increases, thereby relieving the overpressure condition and eliminating repeated operation of the relief valve. This expansion tank should be installed in the cold water line between the water heater and check valve, and must be sized for the entire water volume of the hot water system. See piping Applications.

Other methods of controlling thermal expansion are available. **Check with the local water utility to determine if a check valve exists in the cold water inlet line.** Contact your installing contractor, water supplier, or plumbing inspector for additional information regarding thermal expansion.

C. Condensation

Condensation can form on the water heater when it is first filled with water, and may also occur with a heavy water draw and very cold inlet water temperature. This condition is not unusual and will disappear as the water becomes heated. However, if the condensation should continue, examine the piping and fittings for possible leaks.

D. Insulation Blankets

⚠ WARNING

If local codes require external application of insulation blanket kits, the manufacturer's instructions included with the kit must be carefully followed.

In addition, pay careful attention to the following so as not to restrict the proper function and operation of the water heater:

- Do not cover the operating or warning labels attached to the water heater or attempt to locate them on the exterior of the insulation blanket.
- Do not apply insulation to the top of the water heater. This could interfere with the safe operation of the electrical junction box.
- Do not cover the jacket access panel(s) to the thermostat(s) and heating element(s) or T&P valve.
- Inspect the insulation blanket frequently.

Failure to follow these instructions could result in property damage, severe personal injury, or death.

E. Temperature and Pressure Relief Valve

For protection against excessive pressures and temperatures in this water heater, install temperature and pressure protective equipment as required by local codes, but not less than a combination T&P valve meeting the requirements for *Relief Valves and Automatic Gas Shutoff Devices for Hot Water Supply Systems, ANSI Z21.22B / CSA 4.4-M99* by a nationally recognized testing laboratory that maintains periodic inspection of production listed equipment and materials. This valve must be marked with a maximum set pressure not to exceed the marked maximum working pressure of the water heater. Install the T&P valve into the opening provided and marked for this purpose on the water heater. The T&P valve must be plumbed down so discharge can exit at least 6" above the structural floor. The relief line cannot be in contact with any live electrical parts.

⚠ WARNING

To avoid water damage or scalding due to relief valve operation:

- Discharge line must be connected to relief valve outlet and run to a safe place of disposal. Terminate the discharge line in a manner that will prevent possibility of severe burns or property damage should the relief valve discharge.
- Discharge line must be as short as possible and the same size as the valve discharge connection throughout its entire length.
- Discharge line must pitch downward from the valve and terminate at least 6" above the floor drain, making discharge clearly visible.
- The discharge line shall terminate plain, not threaded, with a material serviceable for temperatures of 375°F or greater.
- Do not pipe discharge to any location where freezing could occur.
- No valve may be installed between the relief valve and heater or in the discharge line. Do not plug or place any obstruction in the discharge line.
- Test the operation of the relief valve after filling and pressurizing the system by lifting the lever. Make sure the valve discharges freely. If the valve fails to operate correctly, immediately replace with a new properly rated relief valve.
- Test T&P valve at least once annually to ensure the waterway is clear. If valve does not operate, turn the heater "off" and call a plumber immediately.
- Take care whenever operating relief valve to avoid scalding injury or property damage.

FAILURE TO COMPLY WITH THE ABOVE GUIDELINES COULD RESULT IN FAILURE OF RELIEF VALVE OPERATION, RESULTING IN POSSIBILITY OF SUBSTANTIAL PROPERTY DAMAGE, SEVERE PERSONAL INJURY, OR DEATH.

RE-INSPECTION OF T&P RELIEF VALVES: T&P valves should be inspected AT LEAST ONCE EVERY THREE YEARS, and replaced if necessary, by a licensed plumbing contractor or qualified service technician to ensure that the product has not been affected by corrosive water conditions and to ensure that the valve and discharge line have not been altered or tampered with illegally. Certain naturally occuring conditions may corrode the valve and its components over time, rendering the valve inoperative. Such conditions can only be detected if the valve and its components are physically removed and inspected. **Do not attempt to conduct an inspection on your own.** Contact your plumbing contractor for a re-inspection to assure continued safety.

FAILURE TO RE-INSPECT THE T&P VALVE AS DIRECTED COULD RESULT IN UNSAFE TEMPERATURE AND/OR PRESSURE BUILD-UP WHICH CAN RESULT IN PROPERTY DAMAGE, SERIOUS PERSONAL INJURY, OR DEATH.

Do not thread a cap or plug into the relief valve or block relief valve outlet line under any circumstances! Explosion and property damage, serious injury, or death may result.

F. Scalding

⚠ WARNING

An ASSE 1017 or ASSE 1070 temperature limiting or mixing valve is recommended in installations servicing disabled or elderly persons, or children. Mixing valves can reduce but do not eliminate the risk of scalding.

To avoid scalding:

- Set the water heater set point temperature as low as possible.
- Feel water before bathing or showering.
- If thermostatic valves are required, use devices specifically designed for such purpose. Install these devices in accordance with instructions provided by the manufacturer.

Failure to install a temperature limiting or mixing valve and follow these instructions could result in property damage, severe personal injury, or death due to scalds.

This water heater can deliver scalding water. Be careful whenever using hot water to avoid scalding injury. Certain appliances such as dishwashers and automatic clothes washers may require increased water temperatures. By setting the thermostat on this heater to obtain the increased water temperature required by these appliances you may create the potential for scald injury.

⚠ DANGER

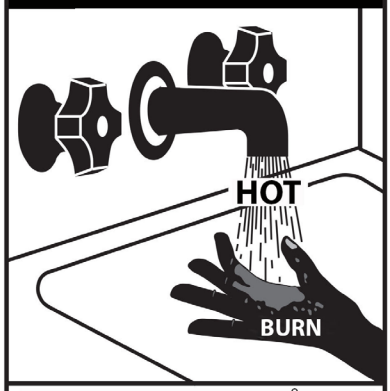

Water temperature over 125°F can cause severe burns instantly or death from scalds.
Children, disabled and elderly are at highest risk of being scalded.
See instruction manual before setting temperature at water heater.
Feel water before bathing or showering.
Temperature limiting valves are available, see manual.

To protect against injury, install a mixing valve in the water system. This valve will reduce point of use discharge temperatures by mixing cold and hot water in branch supply lines. Such valves are available from your local plumbing supplier.

Table 1 details the relationship of water temperature and time with regard to scald injury and may be used as a guide in determining the safest water temperature for your applications.

G. Filling the Heater

- Make certain that the drain valve is completely closed.
- Open the shut-off valve in the cold water supply line.
- Open the hot water faucets to allow air to vent from the heater and piping.
- Allow sufficient time for the heater to completely fill with water.
- Verify elements are installed correctly. Check for leaks.

CAUTION

When filling the water heater, open a hot water tap to release air in the tank and piping. The tank must be full of water before the heater is turned on. Failure to ensure the water heater is full before turning it on could result in damage to the water heater and other property damages. Such damages ARE NOT covered by water heater warranty.

H. Applications

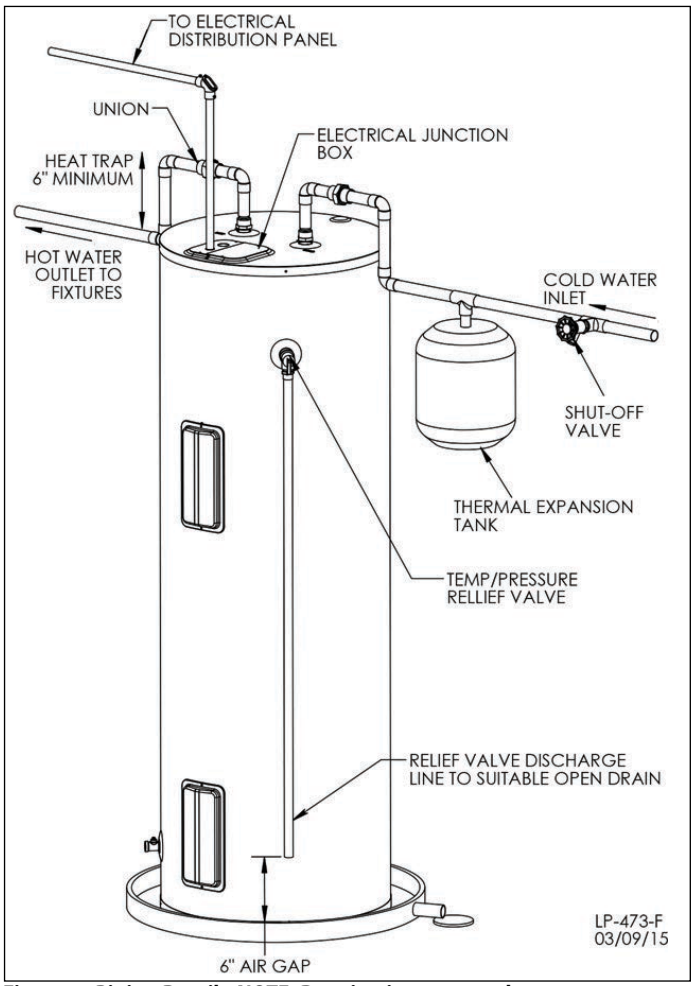

Figure 4 - Piping Detail - NOTE: Drawing is meant to demonstrate system piping concept. Heat traps are optional.

PIPING NOTES:

The following notes are applicable to all of the piping applications demonstrated on this page.

1. Minimum pipe size should match connection size. Upsize pipe accordingly if greater flow is required.
2. A thermal expansion tank suitable for potable water must be sized and installed within this piping system between the backflow preventer and the cold water inlet.
3. All circulators should have an integral flow check.
4. Drains and check valve between unit and storage tank will assist in purging air from system.
5. These drawings are meant to demonstrate system piping only. The installer is responsible for all equipment and detailing required by local codes. In Massachusetts, you must install a vacuum relief valve per 248 CMR.
6. Mixing valve application is optional, but recommended to help prevent scalding. See Part 3 for more information.

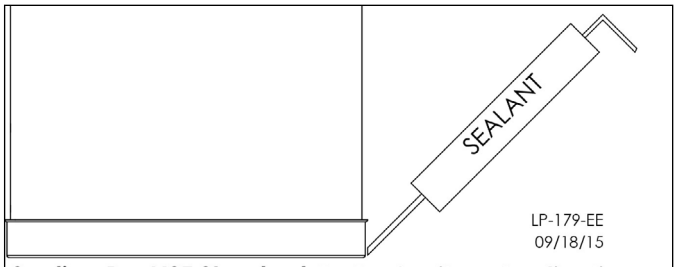

Sealing Per NSF Standard 5 - For Sanitary Applications
Apply a 3/8" bead of RTV Silicone completely around the tank to seal the base to the floor and prevent seepage underneath.

Figure 5 - Sealing the Water Heater for Sanitary Applications

Part 4 - Wiring

CAUTION

Tank must be full of water before the power is turned on. Heating elements will be damaged if energized for even a short time while tank is dry. Failures due to "dry-firing" ARE NOT covered by warranty.

This unit is factory wired to a junction box on top of the water heater for field wiring connection. These heaters are equipped and wired for the maximum possible input allowable (see Table 3 for listing of inputs and amperage requirements). The voltage requirement and dedicated wattage load for the heater is specified on the rating label of the water heater. Consult your local power company to determine if your electrical service is adequate for the additional load of the heater.

Refer to the wiring diagrams for field connections. All wiring must conform to local code and the National Electric Code, and should be done by a qualified licensed electrician or the local electric utility. Grounding can be accomplished by using approved conduit and fittings or other approved conductive material. A grounding wire is provided on the junction bracket. This grounding wire must be used in the installation.

⚠ WARNING

Be sure to ground the water heater. The preferred way to ground is with rigid metal conduit between the main panel and the water heater junction box with approved end fittings (check codes on the use of flexible conduit). If making a separate ground, a green ground wire is provided in the water heater junction box. Replace the junction box cover and insulation after you have made the wiring connections. Failure to follow these instructions could result in property damage, severe personal injury, or death.

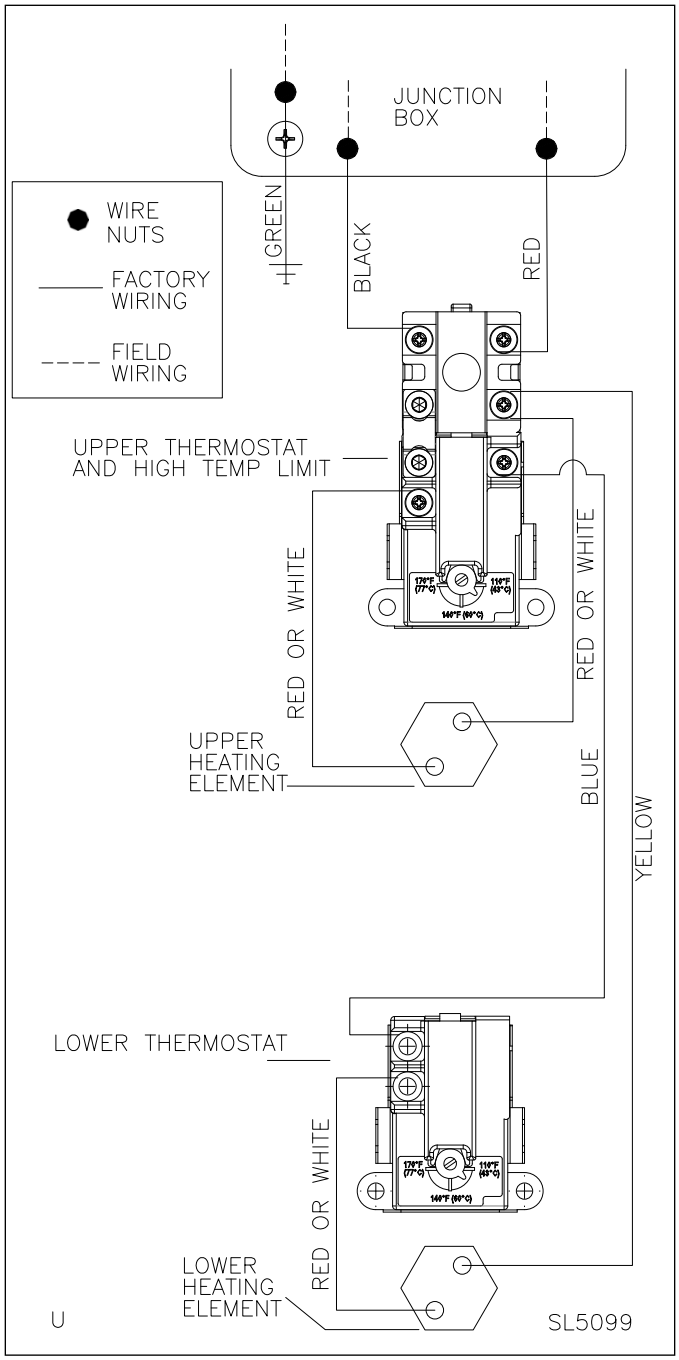

Figure 6 - Dual Element Model Wiring Detail, Non-Simultaneous Element Operation - Green Wire for Grounding the Water Heater

Part 5 - Installation Checklist

Water Heater Location	Yes	No
Close to area of heated water demand		
Indoors and protected from freezing temperatures		
Area free of flammable vapors		
Provisions made to protect area from water damage and control thermal expansion		
Sufficient room to service heater		
Relief Valve	**Yes**	**No**
Temperature and Pressure Relief Valve properly installed and discharge line run to open drain		
Discharge line protected from freezing		
Wiring	**Yes**	**No**
Power supply voltage agrees with water heater rating plate		
Branch circuit wire and fusing or circuit breaker of proper size		
Electrical connections tight and unit properly grounded		
Water Supply	**Yes**	**No**
Water heater completely filled with water BEFORE operating the unit		
Air purged from water heater and piping		
Water connections tight and free of leaks		

Table 4 - Installation Checklist

Part 6 - Operation

CAUTION

Tank must be full of water before the power is turned on. Heating elements will be damaged if energized for even a short time while tank is dry. Failures due to "dry-firing" ARE NOT covered by warranty.

After water and electrical connections have been made and tank is filled with water, turn on power to the heater. The heater is now in operation.

A. Combination Thermostat and High Limit Control (ECO)

Each water heater is equipped with a combination Thermostat - High Limit Control (ECO). Thermostats are located above the heating elements. If for any reason the water temperature becomes excessively high, the ECO breaks the circuit to the heating element. Once the switch opens it must be reset manually. However, THE CAUSE OF THE OVER TEMPERATURE CONDITION MUST BE CORRECTED FIRST.

⚠ WARNING

The cause of the high temperature condition must be investigated by a qualified service technician and corrective action must be taken BEFORE placing the water heater back in service. Failure to do so could result in property damage, severe personal injury, or death.

B. Thermostat Adjustment and ECO Reset

There are two thermostats on dual element heaters. If temperature adjustment is necessary, TURN OFF POWER TO HEATER, remove black access cover and insulation. The thermostat protective cover SHOULD NOT be removed. Set temperature indicator to desired temperature.

Replace insulation and the black access cover. Turn on power to the heater.

DANGER

Failure to disconnect the power from the water heater before attempting to adjust or reset the thermostat(s) will result in property damage, severe personal injury, or death.

IF YOU NEED TO ADJUST THERMOSTAT(S) OR RESET THE ECO (RED RESET BUTTON)

STEP #1 - Turn off power to the water heater by removing fuse or shutting off at circuit breaker.

STEP #2 - Remove the two screws that hold the access cover in place. Remove the cover.

STEP #3 - Remove the insulation to expose the thermostat.

STEP #4 - See Figure 6

a. Reset the ECO by pushing in the red button marked "RESET".

b. Adjust the water temperature by turning the white adjustment knob. Turning the knob to the right (clockwise) makes the water hotter. Turning the knob to the left (counterclockwise) makes the water cooler.

Step #5 - Replace the insulation.

Step #6 - Reattach the access cover with the two screws.

Step #7 - Restore power by replacing the fuse or turning on the circuit breaker.

Step #8 -

a. After resetting the ECO, ensure the water heater is operating properly before leaving the installation.

b. After adjusting the water temperature, allow the water heater enough time to heat the water to temperature. After the water heater has stopped heating, measure the water temperature at a hot water outlet in the structure.

Step #9 - If the water heater is operating properly and the water temperature is satisfactory, adjustment is complete.

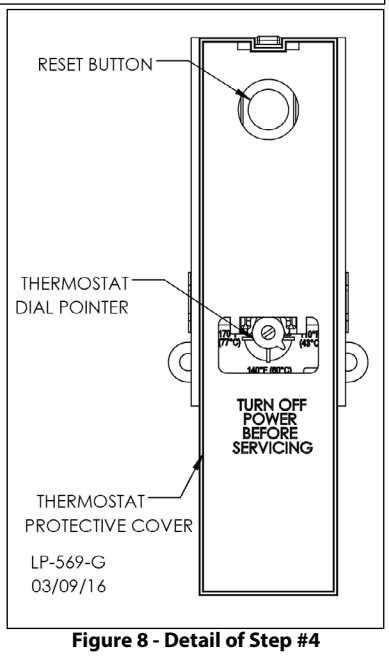

Figure 8 - Detail of Step #4

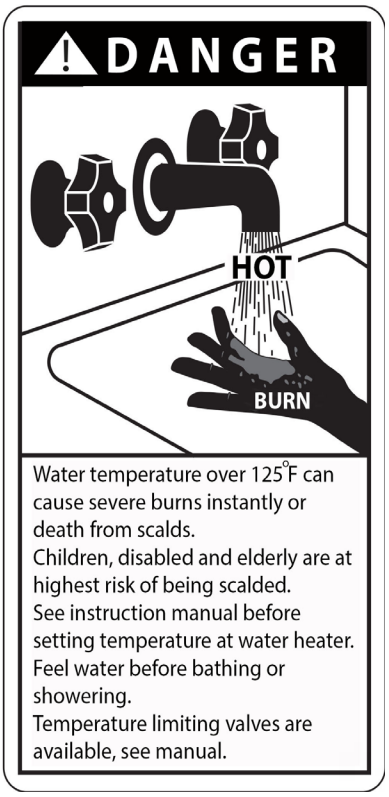

WARNING

Risk of scald injury increases as you increase water temperature.

Failure to replace insulation or access cover could result in property damage, severe personal injury, or death.

C. Heating Element Replacement Procedure

WARNING

If heating elements need replacement, it is very important to use the same voltage, wattage, and construction. DO NOT replace heating element with a generic heating element. Only HTP heating elements are approved for use with this water heater. Failure to follow this warning will result in premature product failure and VOID the warranty, and could result in severe personal injury or death.

STEP #1 - Turn off power to the water heater. Use a Phillips Head screwdriver to remove the wires from the element.

DANGER

Failure to disconnect the power from the water heater before attempting heating element replacement will result in property damage, severe personal injury, or death due to electric shock.

STEP #2 - Run hot water at a faucet in the system. When it runs cold, shut off the faucet. Then shut off water at the main cold water inlet or, if possible, valve off the water heater from the system. Drain the water from the system, or just the water heater if it can be isolated from the system.

WARNING

Completely drain the water heater before removing and replacing a heating element or elements. Failure to do so will result in a leakage of water and property damage, and could possibly result in moderate to severe personal injury or death.

Water drained from the water heater may be scalding hot. Take care to avoid scalding. Wear gloves and safety glasses, and direct water to a safe drainage location. Failure to comply with this warning could result in property damage, severe personal injury, or death.

Step #3 - Remove the element with a 1 1/2" socket wrench or element tool.

Step #4 - Inspect the removed element. Determine whether the replacement element will need a square or circular gasket and washer.

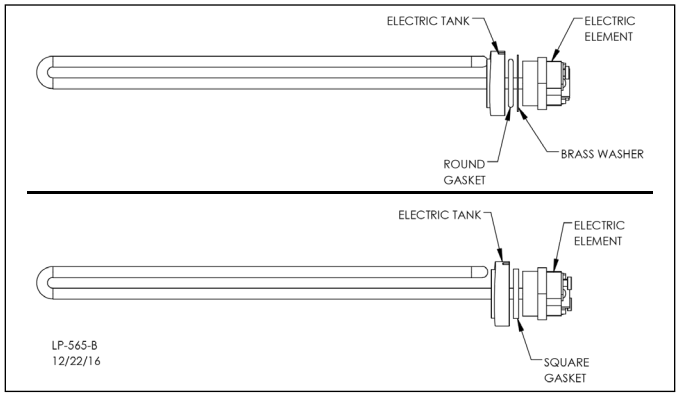

Figure 7 - Heating Element Detail

Step #5 - Ensure thread and opening are completely free of debris. Use a nylon brush to clear away any debris.

Step #6 - Put a small amount of NSF approved lubricant and sealant on the appropriate gasket and/or washer for the installation. Put the gasket and/or washer on the element.

Step #7 - Screw the element clockwise into the tank, and tighten with the 1 1/2" socket wrench or element tool. Be sure O-ring seats properly.

NOTE: Repeat Steps 3 - 6 as Necessary for Multiple Elements

Step #8 - Open the main cold water inlet. If the water heater has been isolated from the system, open the valves. Refill the tank with cold water. Open a hot water faucet high in the system to bleed any air pressure from the system. Water will flow freely when air is completely bled.

⚠ WARNING

When filling the water heater, open a hot water tap to release air in the tank and piping. The tank must be full of water before the heater is turned on. Failure to ensure the water heater is full before turning it on will result in damage to the water heater, and could result in property damage, serious personal injury, or death. Such damages ARE NOT covered by water heater warranty.

Step #9 - Pressure check the tank for leaks around element. If no leaks are found, use a Phillips Head screwdriver to connect the wires to the element.

Step #10 - Turn power back on to the water heater.

CAUTION

Failure to refill the tank before restoring power to the water heater will result in damage to the heating elements and property damage. Such damages ARE NOT covered by warranty.

Part 7 - Maintenance

Considerations

- To avoid electric shock, disconnect electrical supply before performing maintenance.
- To avoid severe burns, allow heater to cool before performing maintenance.

NOTE: In addition to the routine maintenance detailed in this manual, this water heater should be inspected annually by a qualified service technician to assure that all the equipment is operating safely and efficiently. The owner should make necessary arrangements with a qualified heating contractor for periodic maintenance of the heater. Installer must also inform the owner that lack of proper care and maintenance may result in a hazardous condition, premature heater failure, and void the warranty.

Routine preventative maintenance ensure the water heater operates safely and efficiently over its service life. The **Owner / User** may perform the maintenance activities described below.

Monthly (Every two weeks in hard water locations)

It is recommended that a few quarts of water be drained from the heater. This will flush sediment deposits from the bottom of the heater and lengthen the heater's service life. Turn off power to the heater during flushing operation, so the elements will not be damaged.

CAUTION

Failure to shut off the heater when draining may damage the heating elements. Operating a partially filled / empty water heater could lead to damage from "dry-firing". Failures due to such damage ARE NOT covered by warranty.

⚠ WARNING

Water drained from the water heater may be scalding hot. Take care to avoid scalding. Wear gloves and safety glasses, and direct water to a safe drainage location. It is recommended to turn power off to the water heater and run water at a hot water faucet until it cools BEFORE draining water from the heater. Failure to comply with this warning could result in property damage, severe personal injury, or death.

To flush the tank, attach a hose to the field installed drain valve. Close the cold water supply line shut-off valve. Open the drain valve and hot water faucet(s) to vent heater while draining. Direct the flow of water to a drain or bucket where it will not cause damage.

Flush until water runs clear to complete this operation. Close drain valve and reopen the supply line shut-off valve. Close the hot water faucet(s) once all air has been bled from the system (when water runs freely). Make certain that the heater is completely full of water before restoring power.

Periodically (At least twice a year)

Check around the water heater and related plumbing for leaks. If the combination temperature and pressure relief valve discharges periodically, or water is leaking from around the heating elements, there may be a problem with your water system. DO NOT ATTEMPT TO REPAIR LEAKS YOURSELF! Contact a qualified service contractor for assistance.

Check the area around the water heater for flammable liquids or combustible materials. If any are found, remove from the area.

Vacation (Extended shut-off periods)

During extended mild or warm weather periods when hot water will not be in use, shut off the electric power to the tank. When hot water is needed again, restore power to the water heater.

During extended cold weather periods when hot water will not be in use and prone to freezing conditions, shut off electric power to the tank, close the supply line shut-off valve, open the drain valve and drain the water heater to a safe drainage location (as detailed previously). Once drained, close the drain valve. When hot water is needed again, restore the water supply to the tank. Once the tank is full, restore power.

⚠ WARNING

Water drained from the water heater may be scalding hot. Take care to avoid scalding. Wear gloves and safety glasses, and direct water to a safe drainage location. It is recommended to turn power off to the water heater and run water at a hot water faucet until it cools BEFORE draining water from the heater. Failure to comply with this warning could result in property damage, severe personal injury, or death.

The maintenance activities described below are only to be performed by the **Installer / Qualified Service Provider**. These maintenance items should be performed during recommended **annual** service and any service calls.

1. Ask the owner / user if there have been any issues with the water heater. Diagnose any heater issues and repair / replace parts as necessary.
2. Check the water heater and related plumbing for leaks. Repair any that are found.
3. Check the area around the water heater for flammable liquids or combustible materials. If any are found, remove from the area.
4. Check the heating elements while the heater is in operation. If the elements are hissing / singing excessively, they may need to be cleaned. Inspect the elements and clean if necessary.
5. Inspect the Temperature and Pressure (T&P) Relief Valve. See instructions below.
6. Turn power supply off to the water heater. Open the drain valve and drain a few gallons of water from the tank to clear any hard water deposits. Once complete, close the drain valve and restore power to the water heater.

⚠ WARNING

T&P Relief Valve Maintenance Instructions:

- **Annually:** Certain naturally occuring mineral deposits may adhere to the valve, blocking waterways and rendering the valve inoperative. The T&P Relief Valve lever must be operated to ensure the waterways are clear. If waterways are clear, hot water will discharge from the valve. Take precautions to avoid personal injury and property damage from contact with hot water. Before operating lever, check to see that a discharge line is connected to the valve, directing the flow of hot water from the valve to a proper place of disposal.
- Replacement of the valve is required if no water flows when the lever is operated. Turn the water heater off until the valve is replaced.
- If water flows from the valve, drain a few gallons from the tank to ensure the water flows freely.
- **At least once every three years:** To ensure that the T&P valve has not been affected by corrosive water conditions and that the valve and discharge line have not been altered or tampered with illegally, relief valves should be inspected, and replaced, if necessary, by a licensed plumbing contractor or qualified service technician.

Failure to comply with these guidelines could result in failure of relief valve operation, and possibly result in substantial property damage, severe personal injury, or death.

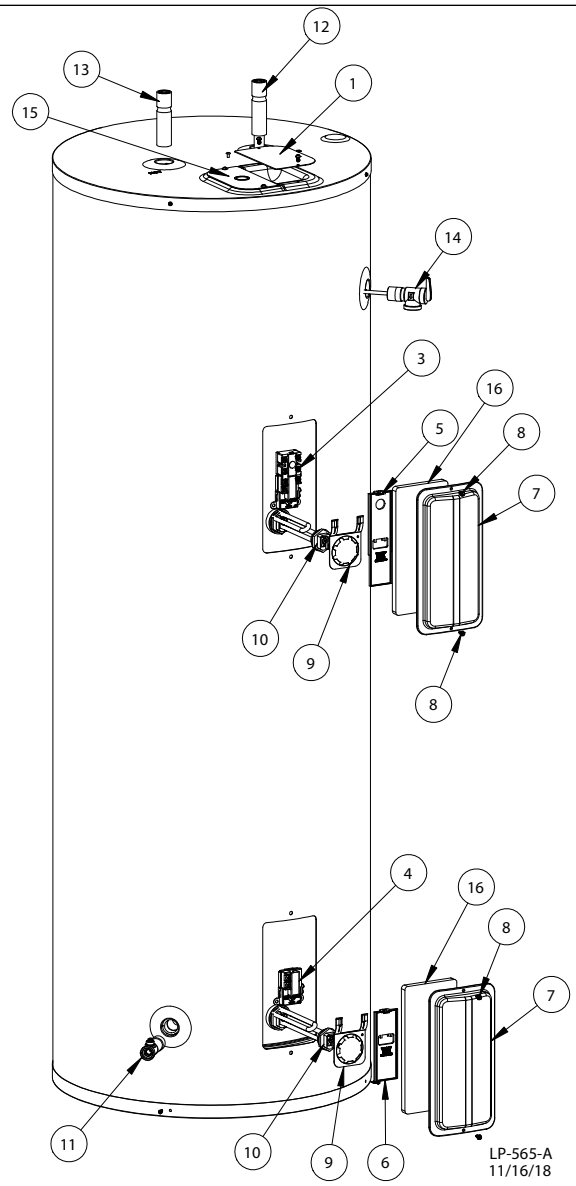

ITEM #	DESCRIPTION	PART #
1	JUNCTION BOX COVER (w/SCREWS)	6060P-983
2	CLIP-ON NUT	7450P-016
3	THERMOSTAT - UPPER	6060P-003
4	THERMOSTAT LOWER	6060P-004
5	THERMOSTAT PROTECTIVE COVER	6060P-634
6	THERMOSTAT PROTECTIVE COVER	6060P-636
7	ACCESS PANEL	6060P-187
8	SCREWS - ACCESS PANEL	6075P-006
9	MOUNTING BRACKET	6060P-956
10	ELECTRIC ELEMENT KIT- 3000W	6060P-939
	ELECTRIC ELEMENT KIT - 4500W	6060P-938
	ELECTRIC ELEMENT KIT - 5500W	6060P-937
11	DRAIN VALVE	6070P-009
12	DIP TUBE - 80/115 GAL.	6060P-1037
	DIP TUBE - 100 GAL. ONLY	6060P-1019
13	NIPPLE/HEAT TRAP	6060P-1038
14	TEMP/PRESSURE RELIEF VALVE	TP1700
15	JUNCTION BOX COVER W/KNOCKOUTS (W/SCREWS)	6060P-982
16	PROTECTIVE INSULATION	6060P-965

PARTS FOR UNITS WITH BOLT-ON T-STAT BRACKETS ONLY-NOT SHOWN

16	THERMOSTAT MOUNTING BRACKET-BOLT-ON	6060P-633
17	SPACER	6060P-979
18	NUTS	6060P-935
19	ELEMENT PROTECTIVE COVER	6060P-997

Figure 9 - Replacement Parts - Non-Simultaneous Operation

Part 8 - Troubleshooting

Problem	Reason	Remedy
No Hot Water	Manual disconnect switch turned off	Turn switch on
	1. Blown fuse or circuit breaker tripped 2. Shorted or improper wiring 3. Circuit overloaded 4. Grounded element or thermostat	1. Replace fuse or reset breaker 2. *Replace, repair, or rewire per detail 3. *Provide adequate circuit to reduce load 4. *Replace
	Manual Reset High Limit (ECO) open 1. Thermostat(s) defective or out of calibration 2. ECO(s) defective or out of calibration 3. Heat build-up due to loose wires	Refer to Part 6, this manual. 1. *Replace thermostat(s) 2. *Lower thermostat setting or replace 3. *Tighten wire connections
	Improper wiring	*Check and rewire per Wiring Detail
Not Enough Hot Water	Heater undersized	Reduce rate of heater use
	Defective element(s)	*Check amperage, replace element if low
	Miswired or defective thermostat causing only one element to work	*Check wiring or replace thermostat
Water Too Hot or Not Hot Enough	Thermostat setting too high or low	Change setting as required
	Thermostat out of calibration	*Replace thermostat
	Thermostat access panel(s) and/or insulation not in place	Inspect and replace as needed
	Thermostat(s) not resting tightly against mounting plate	Ensure that retaining spring(s) or mounting screws hold thermostat(s) tightly to mounting plates
T&P Valve Discharges	Improperly seated valve	Open and close the handle to try to reseat valve
	Thermal expansion in closed water system	Install a thermal expansion tank
	Damaged / defective valve	Replace relief valve **NOTE:** DO NOT plug T&P valve under any circumstances
Water Leaks	Loose connection between inlet / outlet piping, relief valve, and/or hex nut union on tank fittings	Tighten fittings
	Damaged seal ring washer	Replace seal rings as required
	Gasket around heating element(s)	Inspect and replace gasket if necessary
Hot Water Odor	High sulfate or mineral content in water supply	Drain and flush water heater. Refill.
	Bacteria in water supply	Check with local water treatment specialist or utility to identify and address this problem.
Noisy Operation	Hard water scale built up on element(s)	*Remove and clean

Table 5 - Troubleshooting - *See Scald / Electric Shock Warnings and Caution Statements, this Table.

⚠ WARNING

The risk of scald injury increases as you increase water temperature. Use a water tempering or mixing valve and extreme caution when using hot water to avoid scald injury. Consult codes for conformance. Failure to follow the instructions in this warning statement could result in serious personal injury or death from scalds.

Be sure to disconnect electrical power before performing service. Failure to do so could result in electrical shock, property damage, serious personal injury, or death.

CAUTION

If draining of the water heater is necessary, open the T&P valve or a hot water tap to prevent vacuum buildup in the tank and piping.

Everlast Light Duty Commercial Stainless Steel Electric Water Heater Limited Warranty

HTP warrants each light duty commercial stainless steel electric water heater and its components to be free from defects in materials and workmanship according to the following terms, conditions, and time periods. UNLESS OTHERWISE NOTED THESE WARRANTIES COMMENCE ON THE DATE OF INSTALLATION. This limited warranty is only available to the **original consumer purchaser** (hereinafter "Owner") of the water heater, and is non-transferable.

WARRANTY PERIODS

Extended Light Duty Commercial Use Warranty	Model Number Suffix*	Parts	Tank
Water heater is used in a single installation location and registered online within ninety (90) days of the installation date.	No Suffix	Six (6) Years	Lifetime
NOTE: Any water heater used in a leasing or rental program or registered to a business entity or corporation IS EXCLUDED from an Extended Warranty and will be covered by the Standard Warranty detailed below.			
Standard Light Duty Commercial Use Warranty	**Model Number Suffix***	**Parts**	**Tank**
Water heater is used in a leasing or rental program or registered to a business entity or corporation, or	No Suffix	One (1) Year	Six (6) Years
Water heater is not registered online within ninety (90) days of the installation date.			
06 Model Warranty	06		

***Example Model Number with Suffix - EVC080C2X045N06**

COVERAGE

A. Extended Warranty - During the first six (6) years after the original date of installation in the installation location, HTP warrants that it will repair or replace, at its option, any defective or malfunctioning component of the water heater. Replacement components will be warranted for ninety (90) days.

Standard / 06 Model Warranty - During the first year after the original date of installation in the installation location, HTP warrants that it will repair or replace, at its option, any defective or malfunctioning component of the water heater. Replacement components will be warranted for ninety (90) days.

B. Should a defect or malfunction result in a leakage of water from the water heater within the above-stated warranty periods due to defective material or workmanship, malfunction, or failure to comply with the above warranty, with such defect or malfunction having been verified by an authorized HTP representative, HTP will repair or replace, at its option, the defective or malfunctioning water heater. Replacements will be of the nearest comparable model available at the time of replacement. The replacement water heater will be warranted for the unexpired portion of the applicable warranty period of the original water heater.

C. In the event of a leakage of water of a replacement water heater due to defective material or workmanship, malfunction, or failure to comply with the above warranty, HTP reserves the right to refund to the Owner the published wholesale price available at the date of manufacture of the original water heater.

D. If government regulations, industry certification, or similar standards require the replacement water heater or component(s) to have features not found in the defective water heater or component(s), the Owner will be charged the difference in price represented by those required features. If the Owner pays the price difference for those required features and/or to upgrade the size and/or other features available on a new replacement water heater or component(s), the Owner will also receive a complete new limited warranty for that replacement water heater or component(s).

E. If at the time of a request for service the Owner cannot provide a copy of the original sales receipt or the warranty registration, the warranty period for the water heater shall then be deemed to have commenced on the date of manufacture of the water heater and NOT the date of installation of the water heater, and be covered by the unexpired portion of the Standard Light Duty Commercial Use Warranty or 06 Model Warranty detailed above.

F. This warranty extends only to water heaters utilized in heating applications that have been properly installed by qualified professionals based upon the manufacturer's installation instructions.

G. It is expressly agreed between HTP and the Owner that repair, replacement, or refund are the exclusive remedies of the Owner.

OWNER RESPONSIBILITIES

The Owner or Qualified Installer / Service Technician must:

1. Have a relief valve bearing the listing marks of the American Society of Mechanical Engineers (ASME) installed with the water heater assembly in accordance with federal, state, and local codes.
2. Have a vacuum relief valve certified to ANSI Z21.22 - Relief Valves for Hot Water Supply Systems - installed with the water heater assembly in accordance with federal, state, and local codes and in installations prone to vacuum related damages.
3. Maintain the water heater in accordance with the maintenance procedure listed in the manufacturer's provided instructions. Preventive maintenance can help avoid any unnecessary breakdown of the water heater and keep it running at optimum efficiency.
4. Maintain all related system components in good operating condition.
5. Use the water heater in an open system, or in a closed system with a properly sized and installed thermal expansion tank.
6. Use the water heater at water pressures not exceeding the working pressure shown on the rating plate.
7. Keep the water heater free of damaging scale deposits.
8. Make provisions so if the water heater or any component or connection thereto should leak, the resulting flow of water will not cause damage to the area in which it is installed.

WARRANTY EXCLUSIONS

This limited warranty will not cover:

1. Any water heater purchased from an unauthorized dealer.
2. Any water heater not installed by a qualified heating installer / service technician, or installations that do not conform to ANSI, CSA, and/or UL standards, as well as any applicable national or local building codes.
3. Service trips to teach the Owner how to install, use, maintain, or to bring the water heater installation into compliance with local building codes and regulations.
4. The workmanship of any installer. The manufacturer disclaims and does not assume any liability of any nature caused by improper installation, repair, or maintenance.
5. Electricity or fuel costs, or increased or unrealized savings for same, for any reason whatsoever.
6. Any water damage arising, directly or indirectly, from any defect in the water heater or component part(s) or from its use.
7. Any incidental, consequential, special, or contingent damages or expenses arising, directly or indirectly, from any defect in the water heater or the use of the water heater.
8. Failure to locate the water heater in an area where leakage of the tank or water line connections and the relief valve will not result in damage to the area adjacent to the water heater or lower floors of the structure, as well as failure to install the water heater in or with a properly sized drain pan routed to an approved drainage location.
9. Any failed components of the system not manufactured by HTP as part of the water heater.
10. Water heaters repaired or altered without the prior written approval of HTP.
11. Damages, malfunctions, or failures resulting from improper installation, or failure to install the water heater in accordance with applicable building

codes/ordinances or good plumbing and electrical trade practices; or failure to operate and maintain the water heater in accordance with the manufacturer's provided instructions.
12. Damages, malfunctions, or failures resulting from failure to operate the water heater at pressures not exceeding the working pressure shown on the rating label.
13. Failure to operate the water heater in an open system, or in a closed system with a properly sized and installed thermal expansion tank.
14. Failure or performance problems caused by improper sizing of the water heater, expansion device, piping, electric service voltage, wiring or fusing.
15. Damages, malfunctions, or failures caused by improper wiring conversion.
16. Damages, malfunctions, or failures resulting from vacuum conditions.
17. Damages, malfunctions, or failures caused by operating the water heater with modified, altered, or unapproved components, or any component / attachment not supplied by HTP.
18. Damages, malfunctions, or failures caused by abuse, accident, fire, flood, freeze, lightning, electrochemical reaction, acts of God and the like.
19. Tank failures (leaks) caused by operating the water heater in a corrosive or contaminated atmosphere.
20. Damages, malfunctions, or failures caused by operating the water heater with an empty or partially empty tank ("dry firing"), or failures caused by operating the water heater when it is not supplied with potable water, free to circulate at all times.
21. Failure of the heater due to the accumulation of solid materials or lime deposits.
22. Any damage or failure resulting from improper water chemistry, or heating anything other than potable water. WATER CHEMISTRY REQUIREMENTS - Water pH between 6.5 and 8.5. Hardness less than 7 grains (120 mg/L). Chloride concentration less than 100 ppm (mg/L). TDS less than 500 ppm (mg/L).
23. Any damages, malfunctions, or failures resulting from the use of dielectric unions.
24. Production of noise, taste, odors, discoloration, or rusty water.
25. Water heaters replaced for cosmetic reasons.
26. Components of the water heater that are not defective, but must be replaced during the warranty period as a result of reasonable wear and tear.
27. Components of the water heater that are subject to warranties, if any, given by their manufacturers; HTP does not adopt these warranties.
28. Damages, malfunctions, or failures resulting from the use of any attachment(s) not supplied by HTP.
29. Water heaters installed outside the fifty states (and the District of Columbia) of the United States of America and Canada.
30. Water heaters moved from the original installation location.
31. Water heaters that have had their rating labels removed.

ONLINE EXTENDED LIMITED WARRANTY REGISTRATION

To register for the Extended Limited Warranty, complete the form located on the HTP website at http://www.htproducts.com/warranty within 90 days of installation. The form must be completed in full with owner name, email address, and phone number, the address where the unit is installed and installation date, and unit model and serial numbers. Proof of purchase is required, and may be an invoice for the product, or a bill from an installing contractor that clearly documents the installation of the unit. To be valid, proof of purchase must also include the unit serial number. Proof of purchase may be typed or hand written. Submit the proof of purchase to HTP via the directions provided on the website.

PROCEDURES FOR WARRANTY SERVICE REQUESTS

Any claim for warranty assistance must be made immediately upon finding the issue. First, please consult the HTP Warranty Wizard (http://www.htproducts.com/Warranty-Wizard.html) to check warranty eligibility. You may also contact HTP Technical Support at 1-800-323-9651 for questions or assistance. Warranty coverage requires review and approval of the issue with HTP Technical Support or through the Warranty Wizard prior to a full unit replacement. Any claim for warranty reimbursement will be rejected if prior approval from HTP is not obtained in advance of a full unit replacement. Final determination will be made as part of the warranty claim process.

When submitting a warranty claim the following items are required:

1. **Proof of purchase or installation of the product –** Typically a copy of the invoice from the installing contractor, the receipt of the purchase of the product, or an original certificate of occupancy for a new home.
2. **Clear pictures (or video) of the following:**
   a. Serial number tag (sticker)
   b. The product
   c. The product issue / failure whenever possible
   d. A picture of the piping near the product
   e. For gas fired products, a picture of the venting, including how it exits the building

All claims will be reviewed by HTP within three (3) business days. If additional information is required and requested by the HTP Claims Department you will have thirty (30) days to provide it. When all requested information is provided HTP will respond within three (3) business days. The claim will be automatically closed if requested information is not provided within thirty (30) days. Claims will not be reopened without HTP Warranty Supervisor approval.

During the claims process a product that must be replaced will be given a designation of either a) field scrap, or b) return to HTP. If the product must be returned to HTP, the returned product must arrive at HTP within thirty (30) days of the date of our request to return the product. After receipt of the returned product HTP may require as many as thirty (30) additional days for product testing. **NOTE: Any components or heaters returned to HTP for warranty analysis will become the property of HTP and will not be returned, even if credit is denied.**

If you have questions about the coverage of this warranty, please contact HTP at the following address or phone number: HTP, 272 Duchaine Blvd., New Bedford, MA, 02745, Attention: Warranty Service Department, 1(800) 323-9651.

SERVICE, LABOR AND SHIPPING COSTS

Except when specifically prohibited by the applicable state law, the Owner, and not the Manufacturer, shall be liable for and shall pay for all charges for labor or other expenses incurred in the removal, repair, or replacement of the water heater or any component part(s) claimed to be defective or any expense incurred to remedy any defect in the product. Such charges include, but are not necessarily limited to:

1. All freight, shipping, handling, and delivery costs of forwarding a new water heater or replacement part(s) to the owner.
2. All costs necessary or incidental in removing the defective water heater or component part(s) and installing a new water heater or replacement part(s).
3. All administrative fees incurred by the Owner, as well as material required to complete, and/or permits required for, installation of a new water heater or replacement part(s), and
4. All costs necessary or incidental in returning the defective water heater or component part(s) to a location designated by the manufacturer.

LIMITATIONS OF YOUR HTP WARRANTY AND REMEDIES

THE FOREGOING WARRANTIES ARE EXCLUSIVE AND ARE GIVEN AND ACCEPTED TO THE FURTHEST EXTENT UNDER APPLICABLE LAW IN LIEU OF ANY AND ALL OTHER WARRANTIES, EXPRESS OR IMPLIED, INCLUDING WITHOUT LIMITATION THE IMPLIED WARRANTIES OF MERCHANTABILITY AND FITNESS FOR A PARTICULAR PURPOSE AND ANY OBLIGATION, LIABILITY, RIGHT, CLAIM OR REMEDY IN CONTRACT OR TORT, WHETHER OR NOT ARISING FROM HTP'S NEGLIGENCE, ACTUAL OR IMPUTED. THE REMEDIES OF THE OWNER SHALL BE LIMITED TO THOSE PROVIDED HEREIN TO THE EXCLUSION OF ANY OTHER REMEDIES INCLUDING WITHOUT LIMITATION, INCIDENTAL OR CONSEQUENTIAL DAMAGES, SAID INCIDENTAL AND CONSEQUENTIAL DAMAGES INCLUDING, BUT NOT LIMITED TO, PROPERTY DAMAGE, LOST PROFIT OR DAMAGES ALLEGED TO HAVE BEEN CAUSED BY ANY FAILURE OF HTP TO MEET ANY OBLIGATION UNDER THIS AGREEMENT INCLUDING THE OBLIGATION TO REPAIR AND REPLACE SET FORTH ABOVE. NO AGREEMENT VARYING OR EXTENDING THE FOREGOING WARRANTIES, REMEDIES OR THIS LIMITATION WILL BE BINDING UPON HTP. UNLESS IN WRITING AND SIGNED BY A DULY AUTHORIZED OFFICER OF HTP. THE WARRANTIES STATED HEREIN ARE NOT TRANSFERABLE AND SHALL BE FOR THE BENEFIT OF THE OWNER ONLY.

NO OTHER WARRANTIES

This warranty gives the Owner specific legal rights. The Owner may also have other rights that vary from state to state. Some states do not allow the exclusion or limitation of incidental or consequential damages so this limitation or exclusion may not apply to the Owner.

These are the only written warranties applicable to the water heater manufactured and sold by HTP. HTP neither assumes nor authorizes anyone to assume for it any other obligation or liability in connection with said water heaters.

HTP reserves the right to change specifications or discontinue models without notice.

Customer Installation Record Form	
The following form should be completed by the Qualified Installer / Service Technician for you to keep as a record of the installation in case of a warranty claim. After reading the important notes at the bottom of the page, please also sign this document.	
Customer's Name	
Date of Installation	
Installation Address	
Product Name / Serial Number(s)	
Comments	
Installer's Code / Name	
Installers Phone Number	
Signed by Installer	
Signed by Customer	
Installation Notes	

IMPORTANT
Customer: Please only sign after the Qualified Installer / Service Technician has fully reviewed the installation, safety, proper operation, and maintenance of the system. If the system has any problems please call the Qualified Installer / Service Technician. If you are unable to make contact, please call your sales representative.
Distributor / Dealer: Please insert contact details.